BA365C/07/en/02.00
No. 51512805
Software version 2.00

mypro
CLM 431 / CLD 431 Inductive Two-Wire Transmitter for Conductivity and Concentration

Operating Instructions

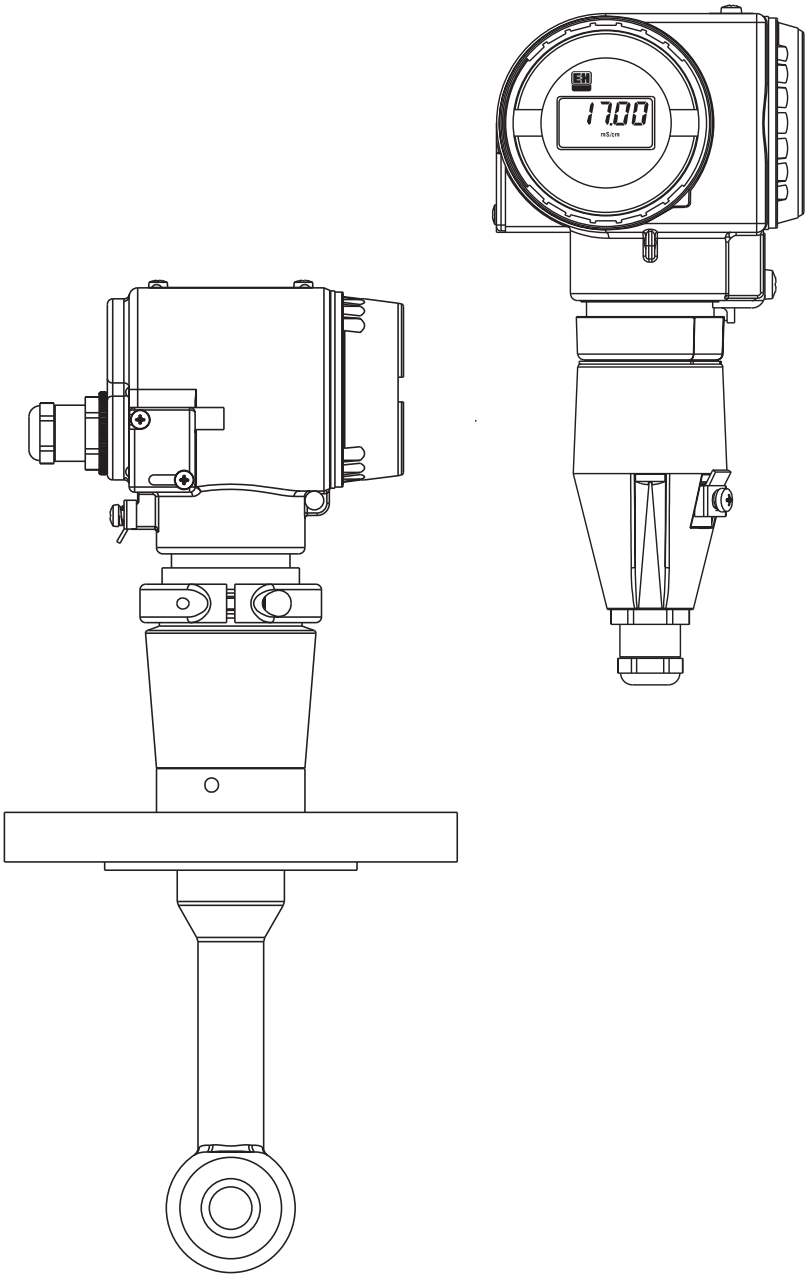

Quality made by
Endress+Hauser

ISO 9001

Endress+Hauser

The Power of Know How

Please familiarise yourself with the instrument before you take any other steps:

You wish to install and prepare the instrument for start-up. The required steps are described in these chapters:

You wish to operate or reconfigure the instrument. The operating concept is explained in these chapters:

When you encounter problems or when the instrument requires maintenance, refer to these chapters for help:

Table of contents

1 General information

1.1 Symbols used

Warning:

This symbol alerts to hazards which may cause serious injuries as well as damage to equipment if ignored.

Note:

This symbol indicates important items of information. Ignoring this information may result in malfunction.

1.2 Storage and transport

The packaging material used to store or transport the instrument must provide shock protection. Optimal protection is provided by the original packaging materials.

Conformance with the ambient conditions (see Technical data) must be assured.

1.3 Unpacking

Verify that the packaging and contents are undamaged! Inform the post office or freight carrier of any damage. Damaged merchandise must be retained until the matter has been settled.

Check that the delivery is complete and agrees with the shipping documents and your order (refer to nameplate for type and variant).

The delivery includes:

MyPro CLM 431:

- Measuring transmitter Mypro CLM 431
- Housing fastening elements (depending on version)
- Operating instructions BA 195C/07/en
- Certificate of conformity (depending on version)

MyPro CLD 431:

- Measuring transmitter Mypro CLD 431 with measuring cell CLS 50
- Operating instructions BA 195C/07/en
- Certificate of conformity (depending on version)

Keep the original packaging materials for future storage or shipping of the instrument.

If you have any questions, consult your supplier or the Endress+Hauser sales agency in your area (see back cover of these operating instructions for addresses).

1.4 Packaging and disposal

Package the assembly properly for reuse at a later point in time. Optimal protection is provided by the original packaging materials.

Observe local regulations for disposal.

1.5 Product structure

You can identify the instrument variant by the order code on the nameplate.

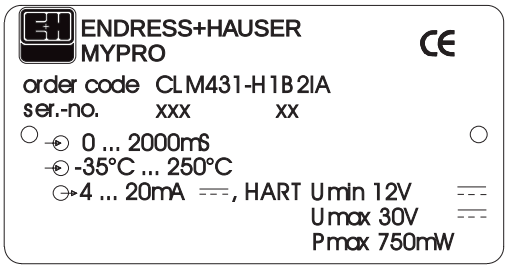

Fig. 1.1 Nameplate of CLM 431

MyPro CLM 431 inductive

Certificate type
A Version for non-Ex area
H Cenelec EEx ia/ib IIC T4 (dir. 76/117/EEC; dir. 94/9/EC)

Cable entry for power supply
1 Cable gland Pg 13.5
3 Cable entry M 20 x 1.5
5 Cable entry NPT ½ "
7 Cable entry G ½
8 Cable entry M 12

Electronics, communication, display
A 4 ... 20 mA, HART, without display
B 4 ... 20 mA, HART, liquid crystal display
C PROFIBUS-PA, without display
D PROFIBUS-PA, liquid crystal display

Accessories
1 No accessories
2 For wall and pipe mounting (DN 60)
3 For wall and pipe mounting (DN 30 ... 200)
4 With flange mounting bracket

Preset measuring parameter
I Inductive measurement

Cable, measuring cell connection
A Without cable

CLM 431- [ ][ ][ ][ ][ ][ ] **complete order code**

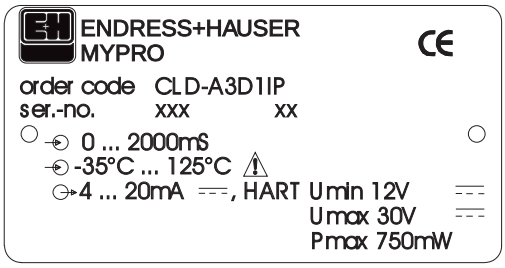

Fig. 1.2 Nameplate of CLD 431

MyPro CLD 431 inductive

Certificate type
A Version for non-Ex area
H Cenelec EEx ia/ib IIC T4 (dir. 76/117/EEC; dir. 94/9/EC)

Cable entry for power supply
1 Cable gland Pg 13.5
3 Cable entry M 20 x 1.5
5 Cable entry NPT ½ "
7 Cable entry G ½
8 Cable entry M 12

Electronics, communication, display
A 4 ... 20 mA, HART, without display
B 4 ... 20 mA, HART, liquid crystal display
C PROFIBUS-PA, without display
D PROFIBUS-PA, liquid crystal display

Accessories
1 No accessories

Measuring cell, process connection and material
IA CLS 50, DIN flange DN 50, PFA, PTFE
IB CLS 50, DIN flange DN 50, PEEK, PTFE
IE CLS 50, 2 " ANSI flange / 300 lbs, PFA, PTFE
IF CLS 50, 2 " ANSI flange / 300 lbs, PEEK, PTFE
IK CLS 50, JIS flange 10K / 50A, SS 316L, PFA, PTFE
IL CLS 50, JIS flange 10K / 50A, SS 316L, PEEK, PTFE
IO CLS 50, DIN flange DN 50 / PN 10, PVDF, PFA
IP CLS 50, DIN flange DN 50 / PN 10, PVDF, PEEK
IS CLS 50, 2 " ANSI flange / 150 lbs, PVDF, PFA
IT CLS 50, 2 "ANSI flange / 150 lbs, PVDF, PEEK
IW CLS 50, JIS flange 10K / 50A, PVDF, PFA
IX CLS 50, JIS flange 10K / 50A, PVDF, PEEK

CLD 431- [ ][ ][ ][ ][ ] **complete order code**

2 Safety

2.1 Intended use

The MyPro CLM 431 / CLD 431 is a field-tested and reliable measuring transmitter for determining the conductivity and concentration of liquid media.

In particular, the MyPro CLM 431 / CLD 431 is suitable for use in the following areas of application:

- Chemical industry
- Pharmaceutical industry
- Foodstuffs industry
- Drinking water treatment
- Condensate processing
- Municipal sewage treatment plants
- Industrial effluent treatment

The instrument design permits operation in explosive atmospheres (zone 1 according to ElexV).

2.2 General safety notes

This device has been manufactured for safe operation according to the state of the art in engineering and conforms to the applicable regulations and European standards (see Technical data). It has been designed according to EN 61010-1 and has left the manufacturer's works in perfect condition.

However, if used improperly or for purposes other than the intended purpose, it may be dangerous, e.g. due to incorrect connection.

Warning:

- Operating this instrument in any way other than as described in these instructions may compromise the safety and function of the measuring system and is therefore impermissible.
- The notes and warnings in these installation and operating instructions must be strictly adhered to!

2.3 Installation, start-up, operation

Warning:

- This device may only be installed, connected electrically, commissioned, operated and serviced by properly trained personnel authorised by the system operator.
- The personnel must be familiar with these operating instructions and must adhere to the instructions described therein.
- Before connecting the instrument to the mains, make sure that the mains voltage matches the voltage rating on the nameplate.
- When connecting an instrument in an explosive atmosphere, adherence to the applicable regulations is mandatory (see chapter 2.7).
- Check that all connections have been properly made before powering up the system!
- The instrument housing must be grounded before start-up!
- Damaged equipment that may be dangerous must not be operated and should be clearly identified as being defective.
- Any troubleshooting of the measuring system is to be performed exclusively by authorized, trained personnel.
- If faults cannot be remedied, the instrument must be removed from service and secured to prevent accidental start-up.
- Repair work must be carried out directly by the manufacturer or by the Endress+Hauser Service Organization.

2.4 Monitoring and safety features

Monitoring features

If a problem ever occurs, an alarm symbol flashes on the display, and a defined error current (22 +/– 0.5 mA) is output via the current interface.

Safety features

This instrument is protected against external influences and damage by the following design measures:

- Massive metal housing
- UV-resistant front panel
- Housing protection type IP 65

2.5 Immunity to interference

This instrument has been tested according to the applicable European standards for industrial applications with regard to electromagnetic compatibility and has been protected against electromagnetic interference (see Technical data in chapter 10).

Warning:

- The specified immunity to interference only applies for devices connected as outlined in these operating instructions.

2.6 Certificate of conformity

The MyPro CLM / CLD 431 transmitter has been developed and manufactured in accordance with currently valid European standards and directives and is suitable for use in hazardous areas.

Compliance with the harmonised European standards for the use of the equipment in hazardous areas is confirmed by this certificate of conformity.

Note:

An EC conformity certificate and additional safety instructions (XA 173C/07/de) are supplied.

2.7 Notes for installation in hazardous areas

The MyPro CLM 431 / CLD 431 transmitter has been manufactured and tested in accordance with the harmonised European regulations (CENELEC) for »electric equipment for hazardous areas«. The equipment complies with the basic requirements of the 76/117/EEC directive and is suitable for use in hazardous areas.

Warning:

- The applicable national regulations are to be observed for installation and operation.
- All lines conducting signals are to be shielded according to VDE 0165 and to be routed separately from other control lines.

Note:

For helpful information on the installation and operation of electric equipment in hazardous areas, please refer to the Endress+Hauser fundamental information brochure GI 003/11/d »Explosionsschutz von elektrischen Betriebsmitteln und Anlagen« (»Explosion protection of electric equipment and systems«). This brochure can be ordered from the Endress+Hauser sales offices.

3 Installation

3.1 Measuring system

The complete measuring system comprises:

- the MyPro CLM 431 transmitter
- an inductive measuring cell with or without an integrated temperature sensor, e.g. CLS 50 with a permanently attached cable
- or the compact unit MyPro CLD 431 with conductivity measuring cell CLS 50.

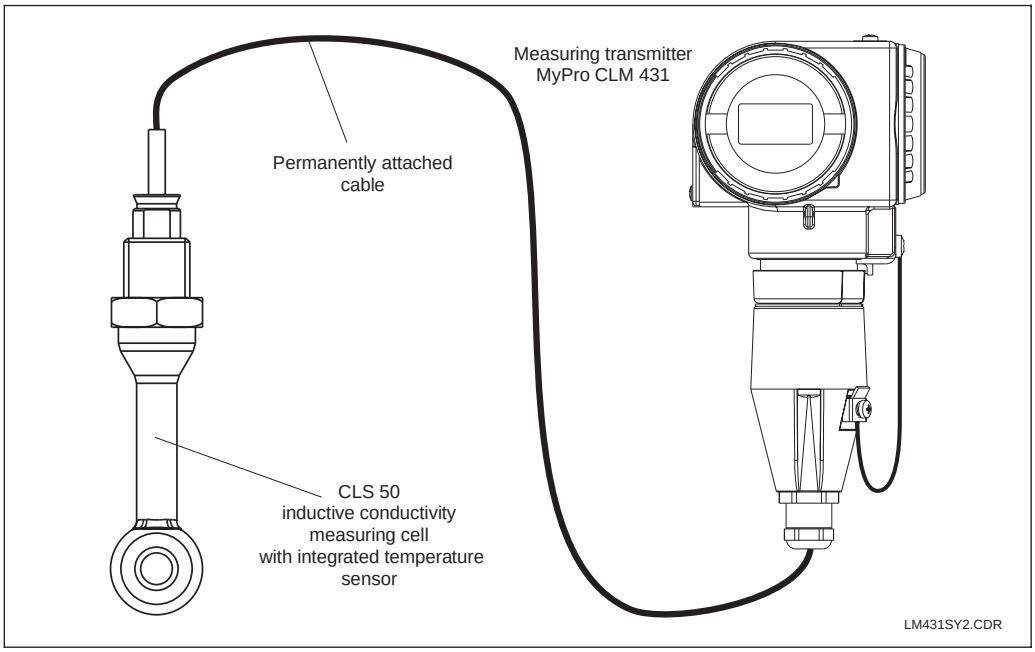

Fig. 3.1 Complete measuring system MyPro CLM 431 with permanently attached cable and conductivity measuring cell CLS 50

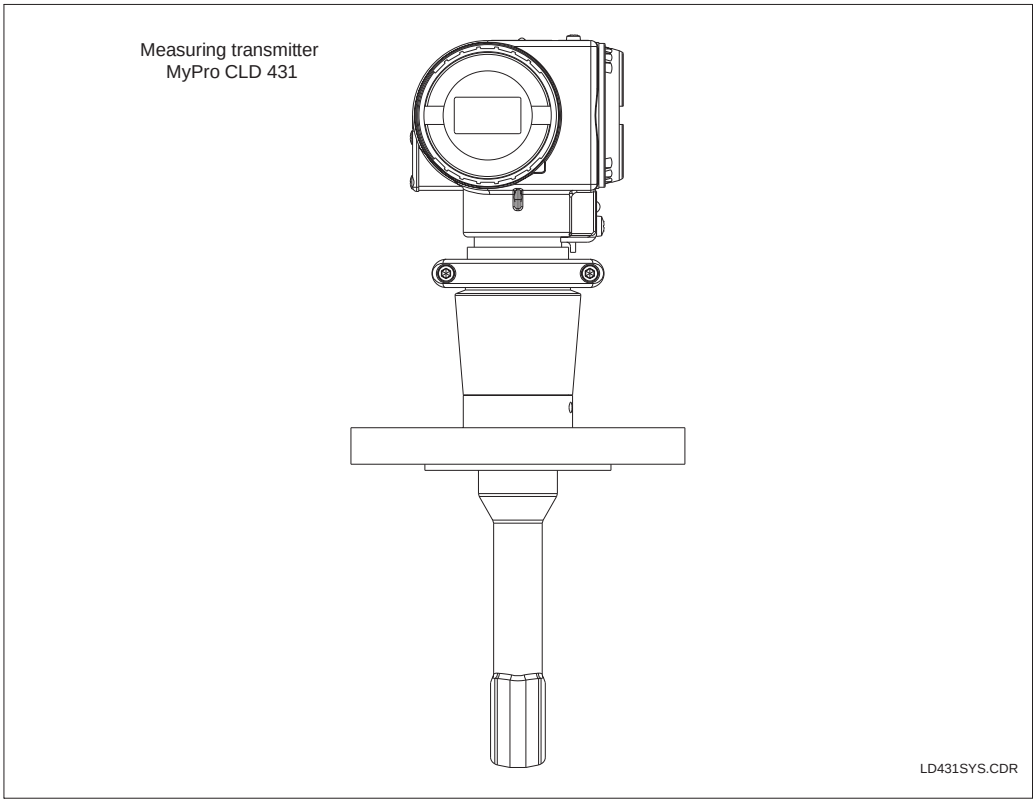

Fig. 3.2 Compact unit MyPro CLD 431 with integrated conductivity measuring cell CLS 50

3.2 Dimensions

3.2.1 MyPro CLM 431

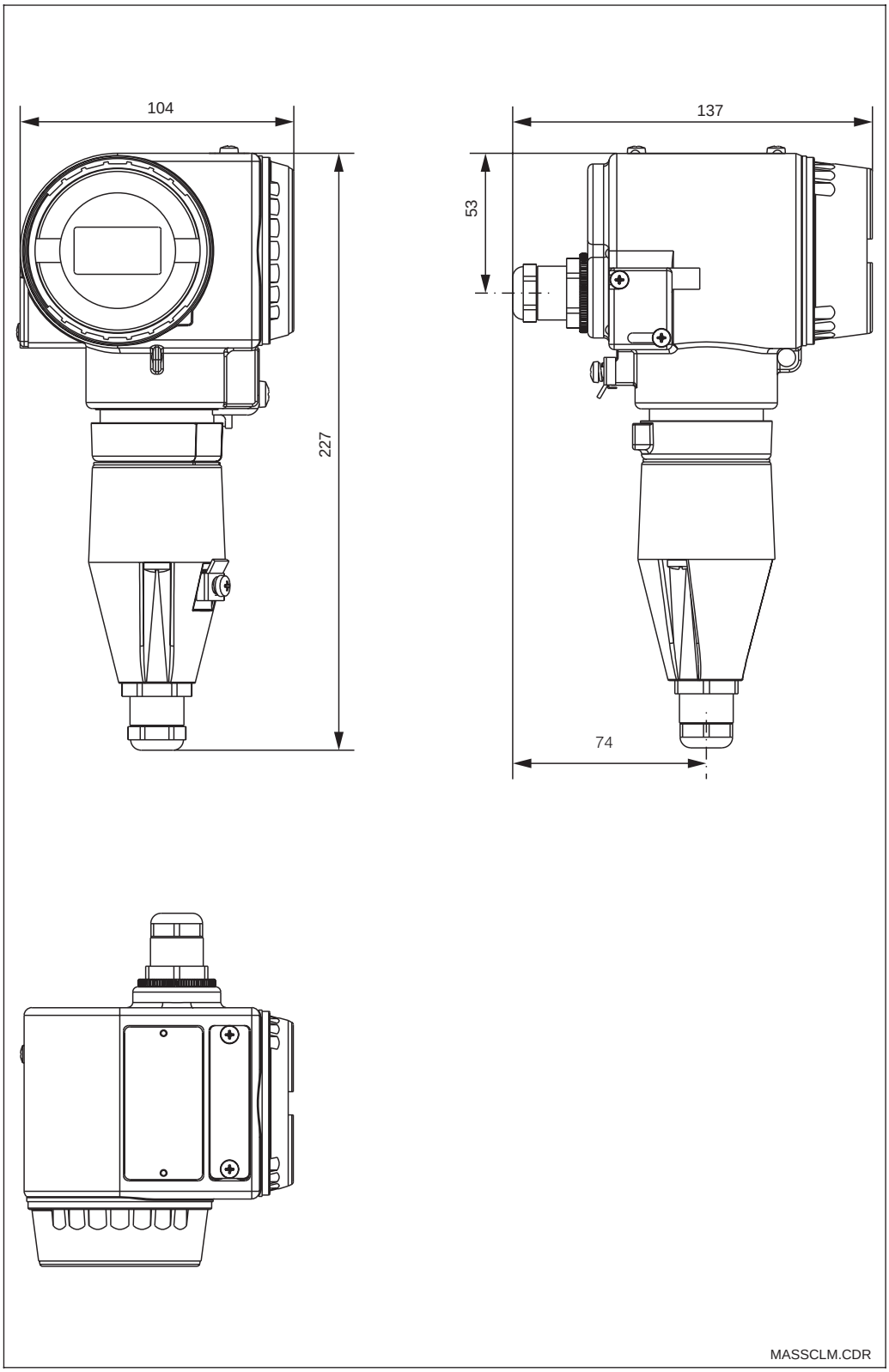

Fig. 3.3 Dimensions of MyPro CLM 431

3.2.2 MyPro CLD 431

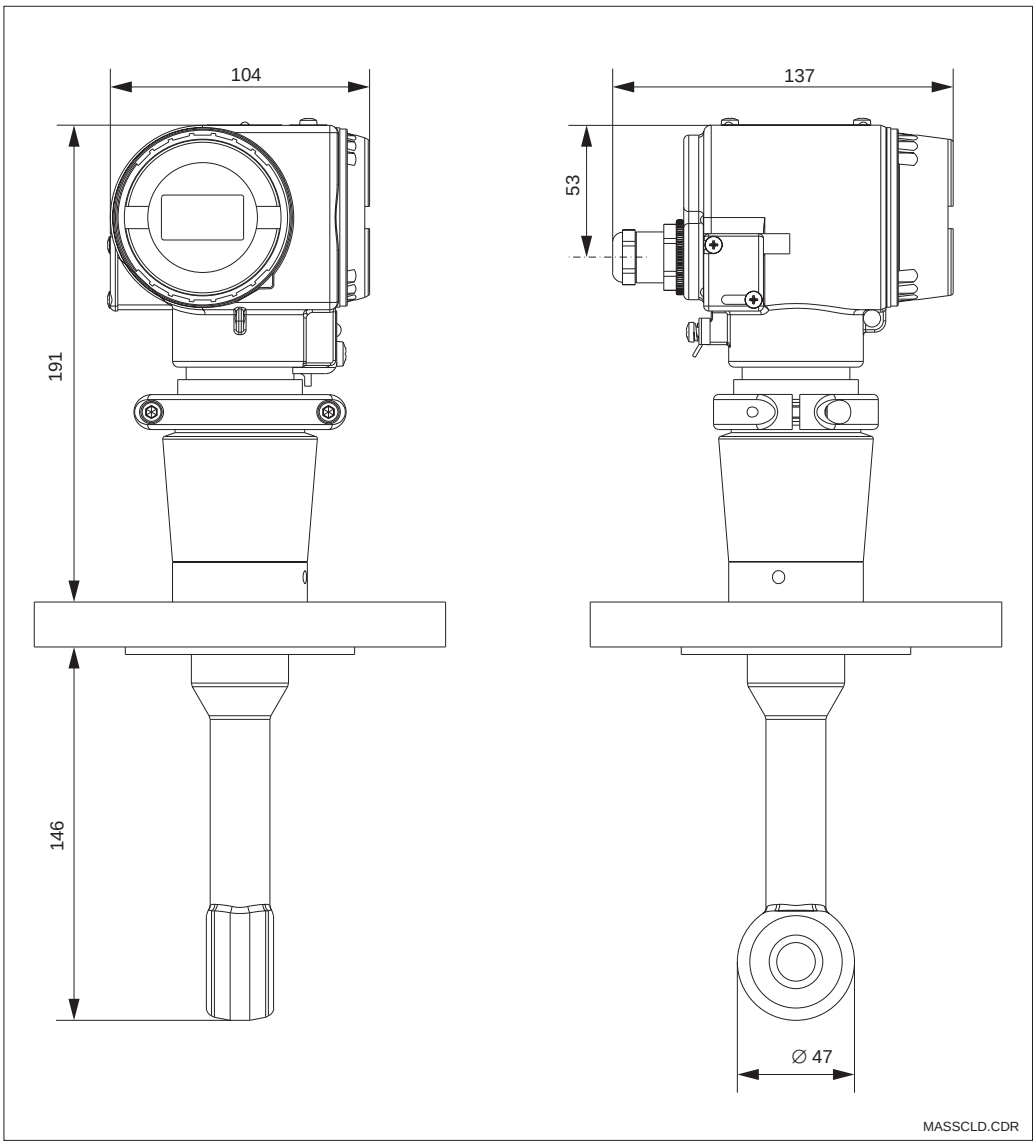

Fig. 3.4 Dimensions of MyPro CLD 431 with CLS 50

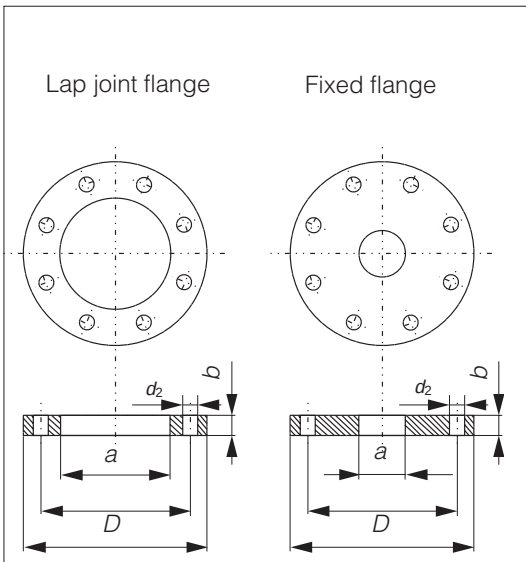

Fixed flange SS 316L	DN 50 PN 16	ANSI 2" 300 lbs	JIS 10K 50A
D	165	165,1	155
Ø *k*	125	127	120
d_2	4 × 18	8 × 19	4 × 19
b	18	22,2	16
a	27	27	27
Bolts	M16	M16	M16
Lap joint flange PVDF	DN 50 PN 10	ANSI 2" 150 lbs	JIS 10K 50A
D	165	165	152
Ø *k*	125	121	120
d_2	4 × 18	8 × 19	4 × 19
b	18	18	18
a	78	78	78
Bolts	M16	M16	M16

Fig. 3.5 Flange dimensions for MyPro CLD 431

3.3 Mounting

3.3.1 MyPro CLM 431

The measuring transmitter MyPro CLM 431 can be installed on a wall or pipe using the holder (depending on version) supplied with the instrument.

The holder is attached to the MyPro housing with two screws. The housing can be rotated 90° thanks to four boreholes.

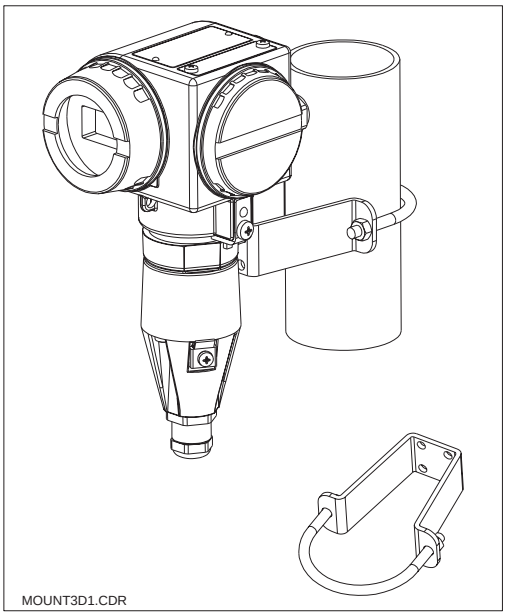

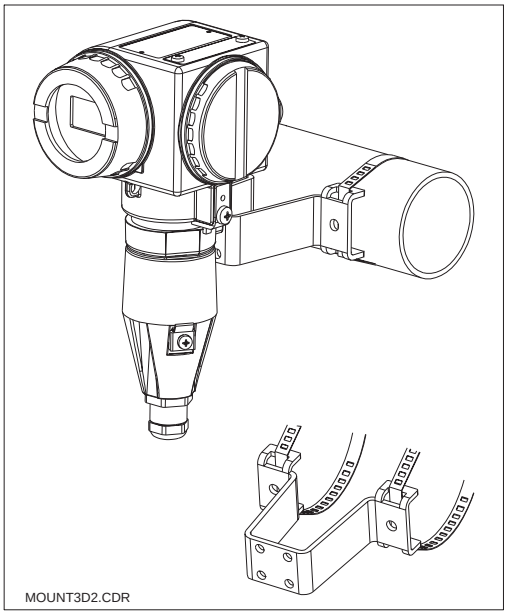

Left:
Pipe mounting, DN 60
with mounting bracket

Right:
Pipe mounting,
DN30 ... 200
with mounting bracket
Fig. 3.6 (horizontal attachment)

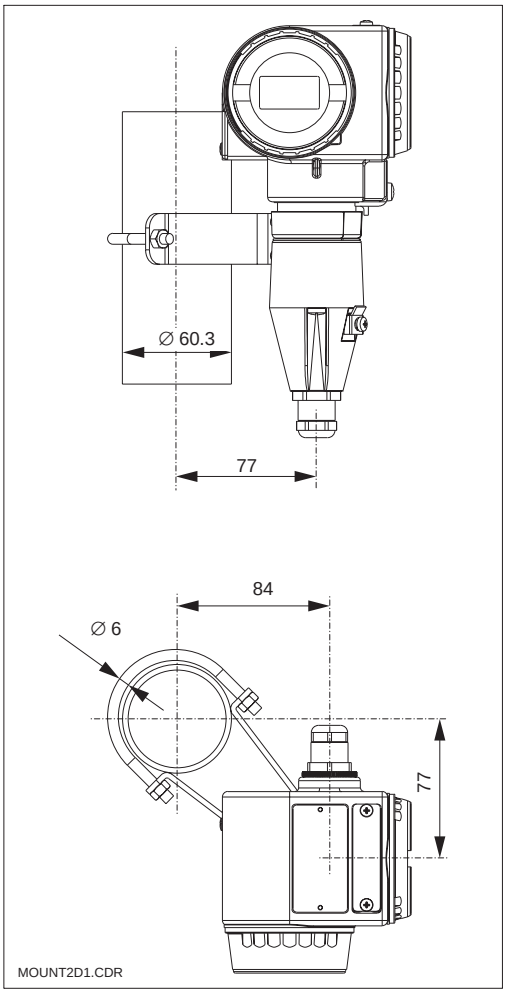

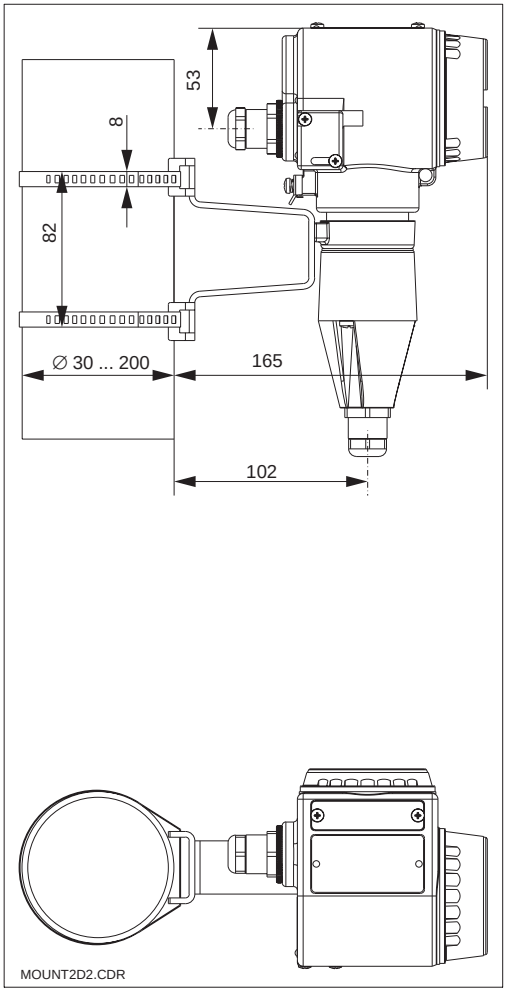

Left:
Pipe mounting, DN 60
with mounting bracket

Right:
Pipe mounting,
DN 30 ... 200
with mounting bracket
Fig. 3.7 (vertical attachment)

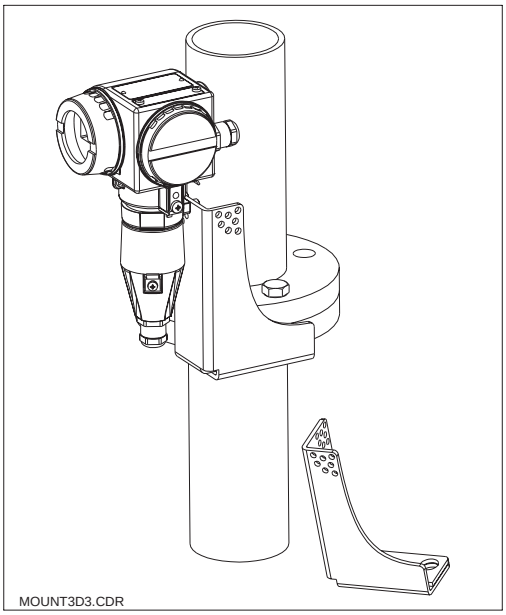

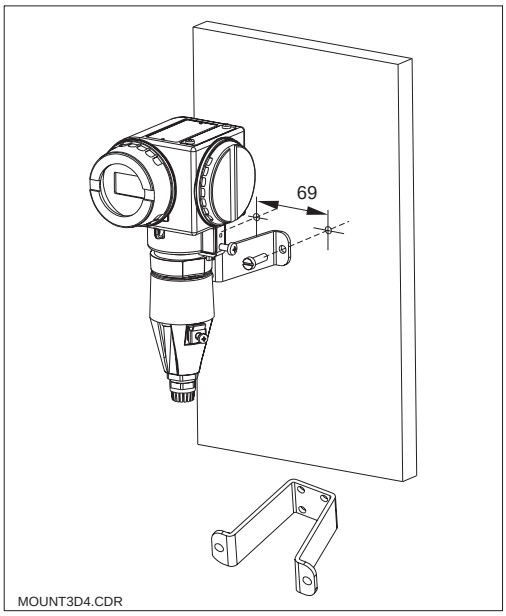

Fig. 3.8 *Left:* Flange mounting with angle bracket

Right: Wall mounting with mounting bracket

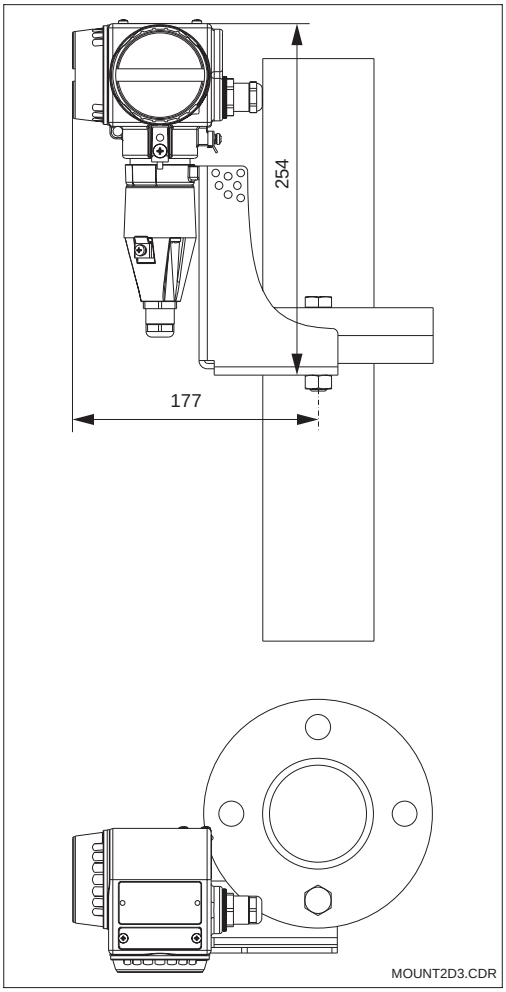

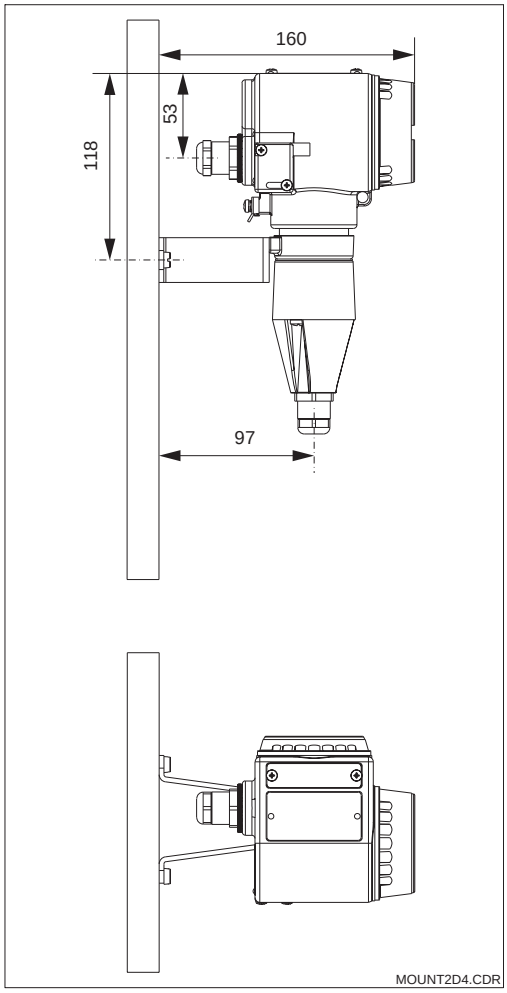

Fig. 3.9 *Left:* Flange mounting with angle bracket

Right: Wall mounting with mounting bracket

3.3.2 MyPro CLD 431

The compact version MyPro CLD 431 is installed directly in a tank or pipeline by means of a flange connection.

The medium flow through the measuring cell opening should be in the flow direction.

The distance of the measuring cell from the inside pipe wall affects the accuracy of measurement.

Note:

- The orientation of the measuring cell is facilitated by the arrow on the flange or by the flats on the measuring cell head.
- An installation angle deviation of up to 30° from the flow direction has no negative effect on accuracy.
- In case of an adequate wall clearance a > 30mm, the installation factor f can be neglected (f=1.0).
  If the wall clearance is lower, the installation factor increases (f > 1) for electrically insulating pipes and decreases for electrically conducting pipes (f < 1).
- The minimum inner tube diameter b at the flange mounting position is 49,5 mm.
- The minimum immersion depth c of the measuring cell is 80 mm.
- The torque must not exceed 45 Nm for the DN50 / PN16 flange or 26 Nm for the 2 " ANSI flange.
- Observe the temperature limits when installing the compact version (see Technical data, fig. 10.1).

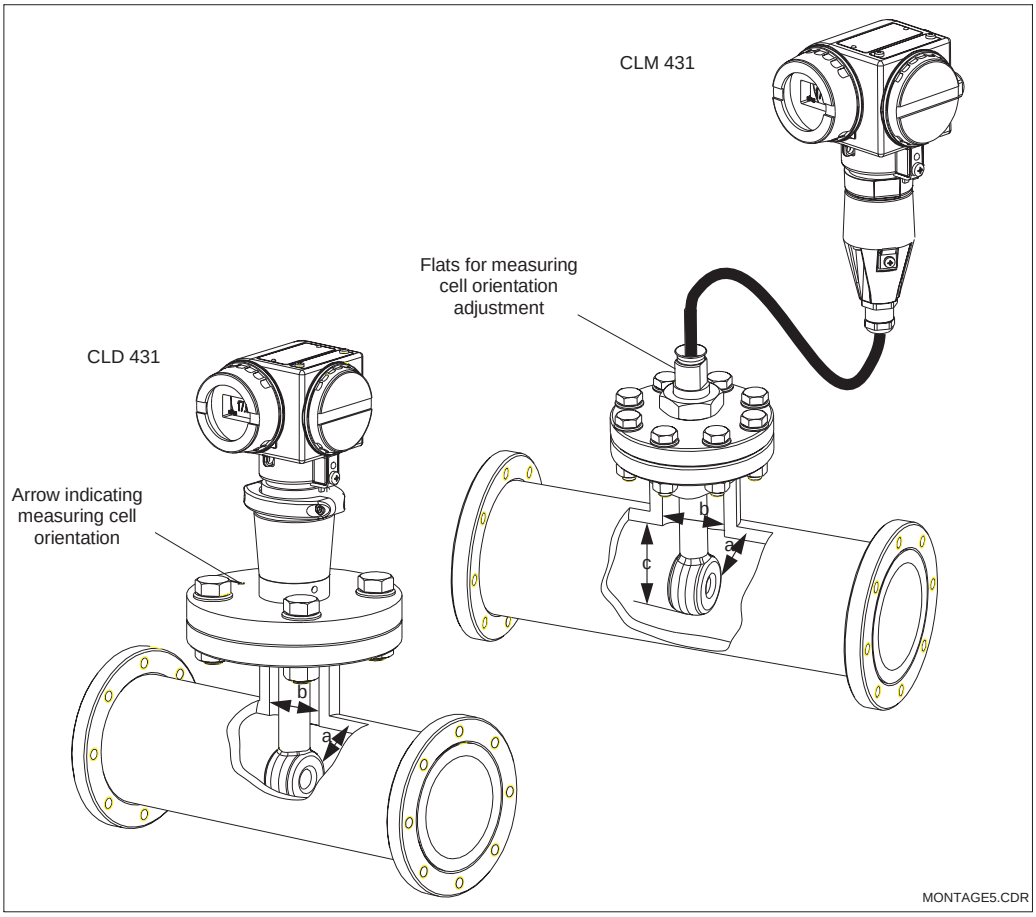

Fig. 3.10 Mounting of MyPro CLD 431 or CLS 50 with wall clearance *a*

Left: MyPro CLD 431

Right: MyPro CLM 431 with CLS 50

3.3.3 Instrument orientation

Housing orientation

Following horizontal or vertical attachment to a wall or pipe, the orientation of the housing can be changed to provide optimal accessibility.

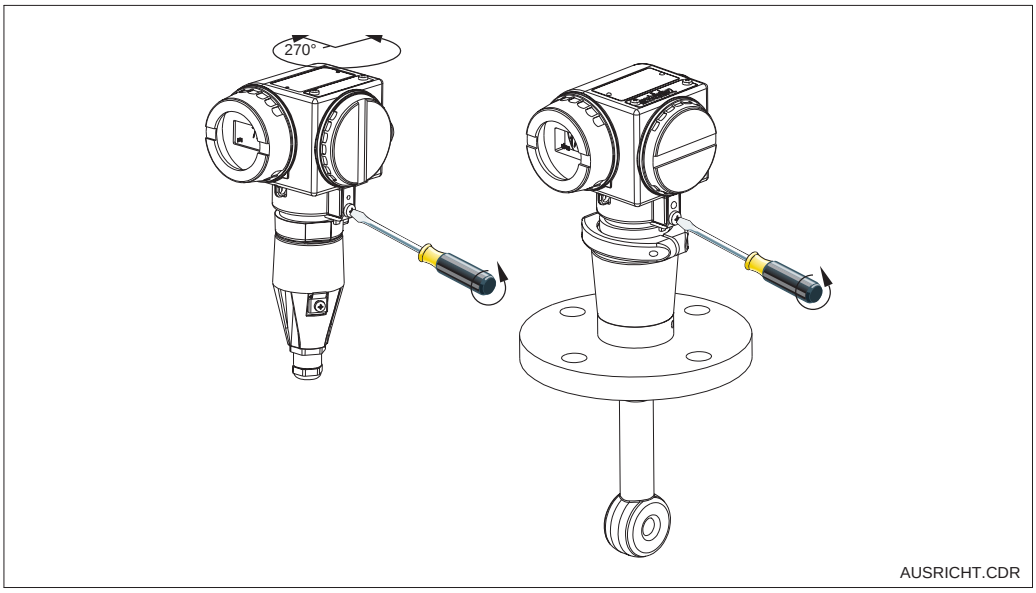

Fig. 3.11 Housing orientation

Left:
MyPro CLM 431

Right:
MyPro CLD 431

Note:

Pay attention to the keypad position during installation. The keys should be easily accessible.

Display rotation

The display can be rotated to permit perfect viewing in different mounting positions. It can be rotated in four 90° steps.

Refer to the figure below for the procedure to follow.

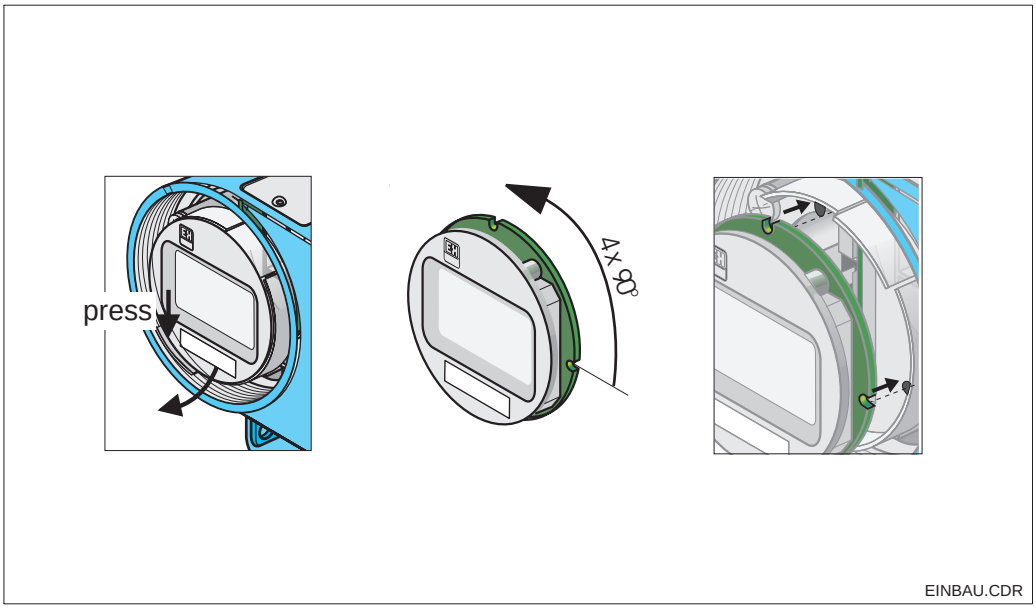

Fig. 3.12 Removal and installation of display

① Unscrew the lid over the display. Push the tab towards the outside.

② Tilt the display forward and remove.

③ Turn the removed display in 90° steps. Reinstall in the desired orientation.

④ To reinstall, latch the display back into the guide.

3.4 Connection of conductivity measuring cells

3.4.1 Suitable measuring cells

The following inductive conductivity measuring cell can be used for the measuring transmitter MyPro CLM 431:

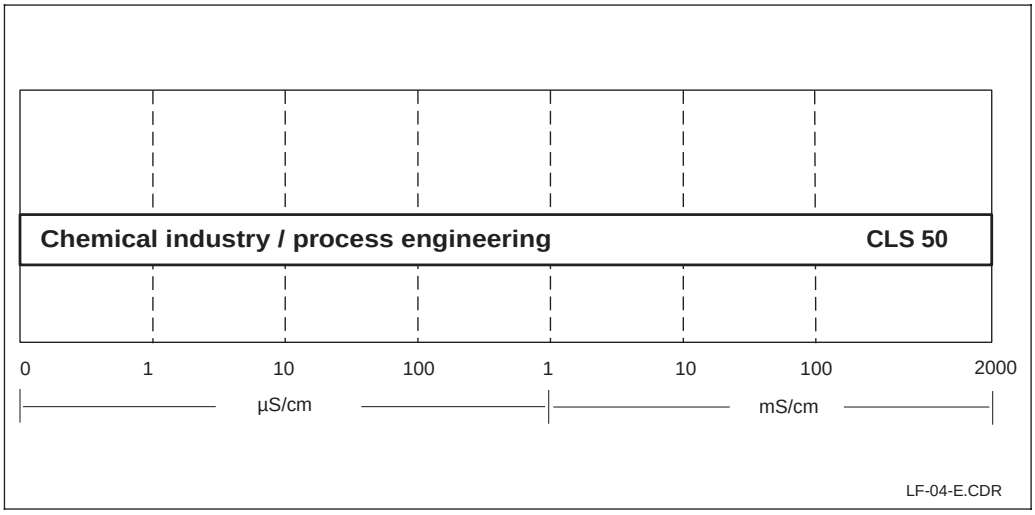

Fig. 3.13 Suitable measuring cell CLS 50 with measuring range

3.4.2 Measuring cable connection

The inductive conductivity measuring cell is connected by means of a standard shielded, multi-core permanently attached cable. Should an extension be necessary, use junction box VBM and extension cable CLK 5.

Construction and preparation of CLK 5 cable with example for connection

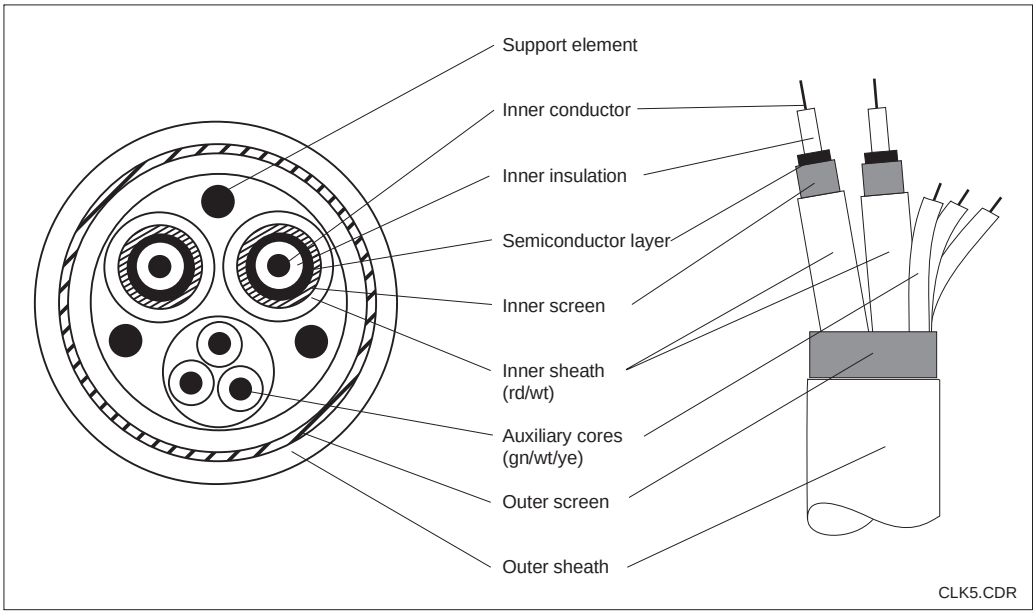

Fig. 3.14 Construction of extension cable CLK 5

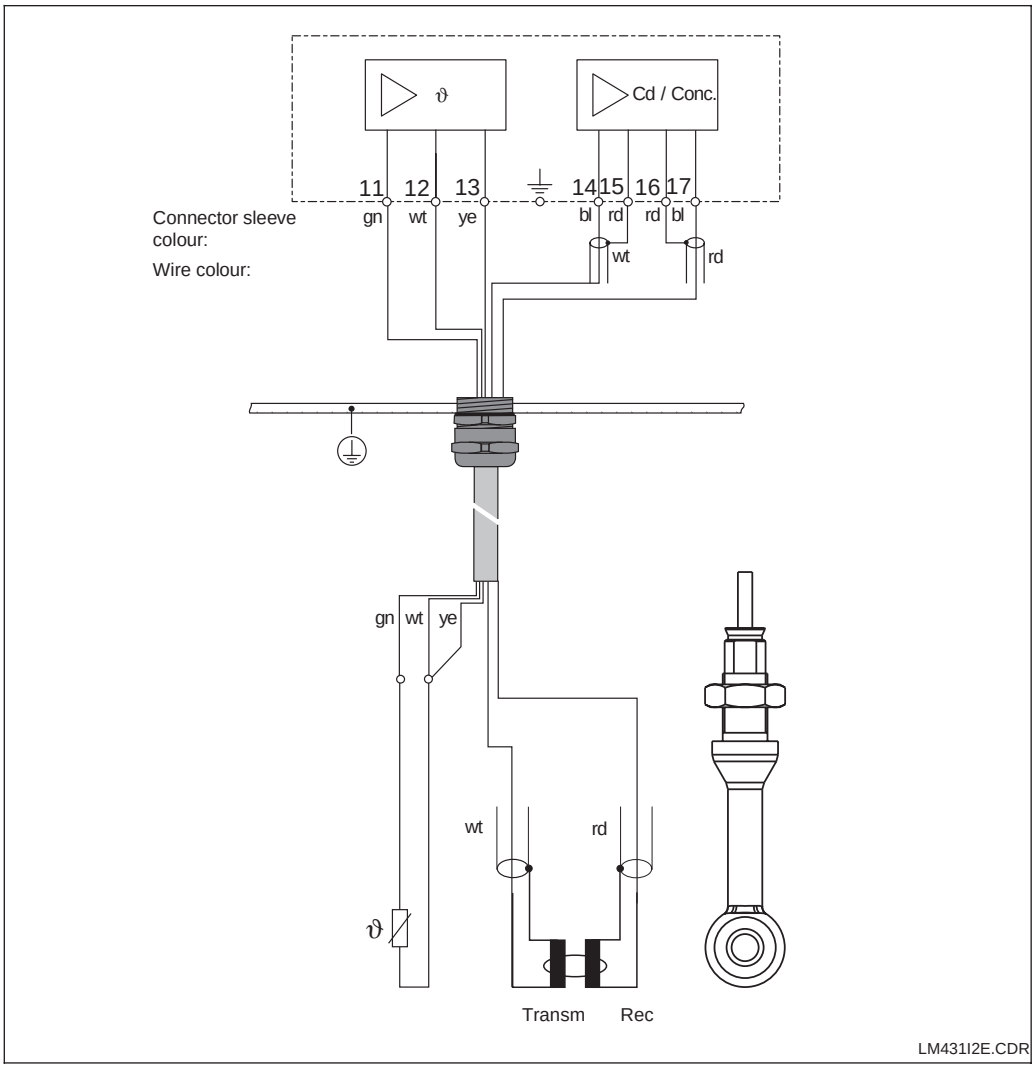

Fig. 3.15 Connection of measuring cell CLS 50 with permananently attached cable

Instructions for measuring cable connection to CLM 431

① Loosen the fastening screws and pull off the connection hood.

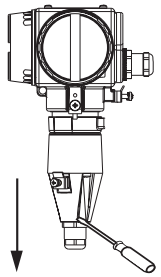

② Loosen the Pg cable gland on the cover and thread cable through.

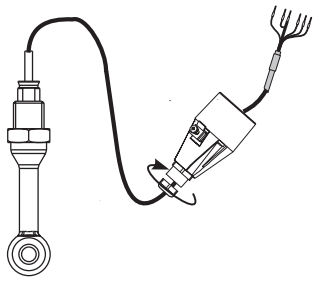

③ Connect the instrument cable end according to the terminal assignment diagram in fig. 3.15.

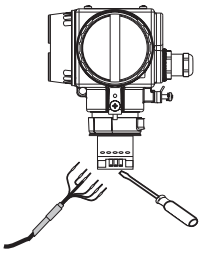

④ Replace the connection hood and tighten the fastening screws.

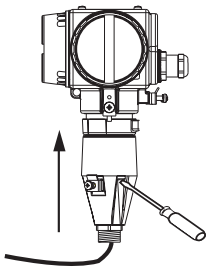

⑤ Connect the screen following sequence a to c.

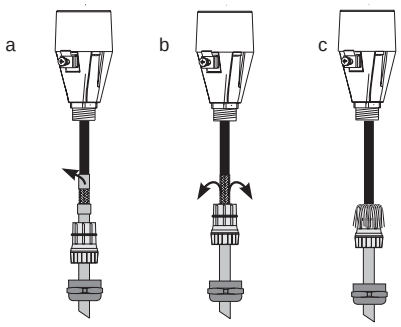

⑥ Pull the cable through until the Pg cable gland can grasp the cable insulation. Tighten the Pg cable gland.

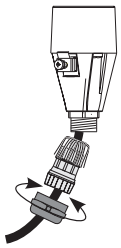

ANSCHL2.CDR

Fig. 3.16 Measuring cable connection

Note:

The screen can also be connected to the screen terminal on the terminal block.

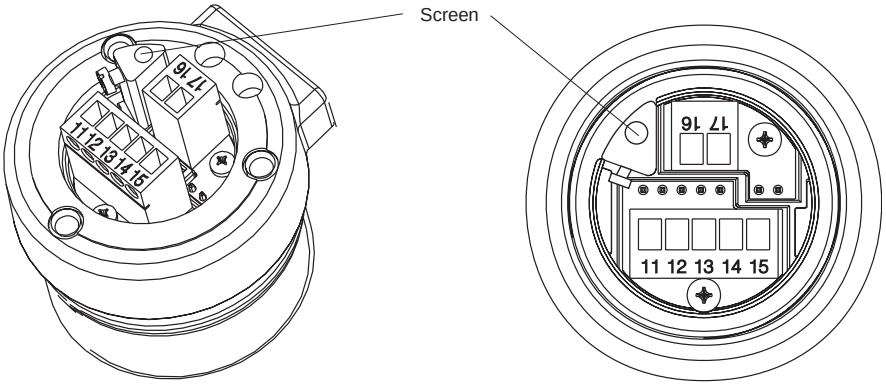

ANSCHL.CDR

Fig. 3.17 Terminal block

3.5 Electrical connection

The measuring transmitter MyPro CLM 431 / CLD 431 has separate connection compartments for the power supply and measuring cell connections.

The terminals for the two-wire line are located under the screwed cover on the right side of the instrument.

Proceed as described below to connect the MyPro CLM 431 / CLD 431:

- Connect the MyPro CLM 431 / CLD 431 transmitter to a 12 ... 30 V DC power source .
- Ground the instrument via the outer ground terminal.
- Ground the two-wire line screen via the ground terminal in the connection compartment.

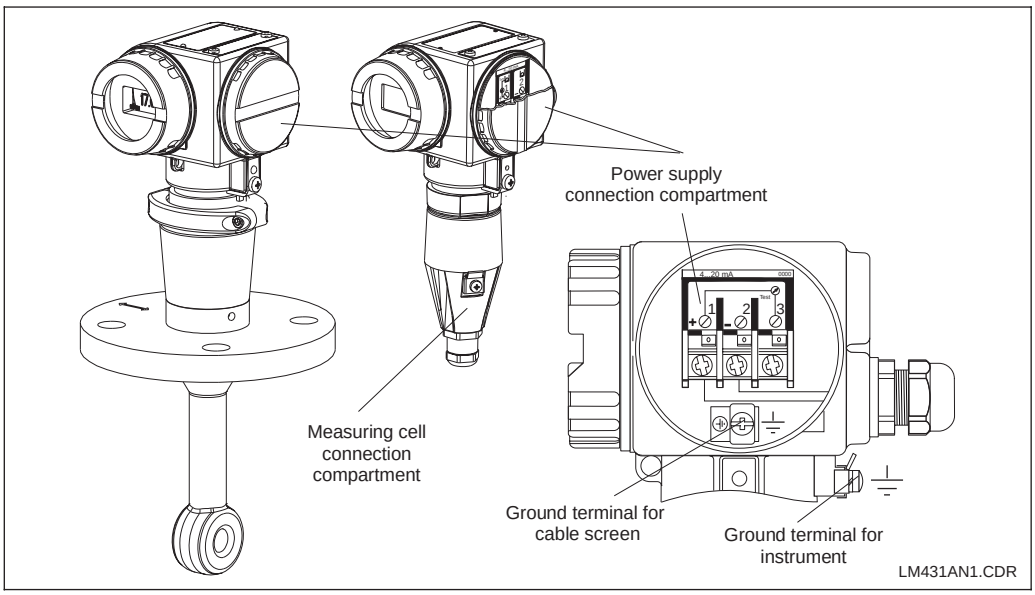

Fig. 3.18 Electrical connection compartment

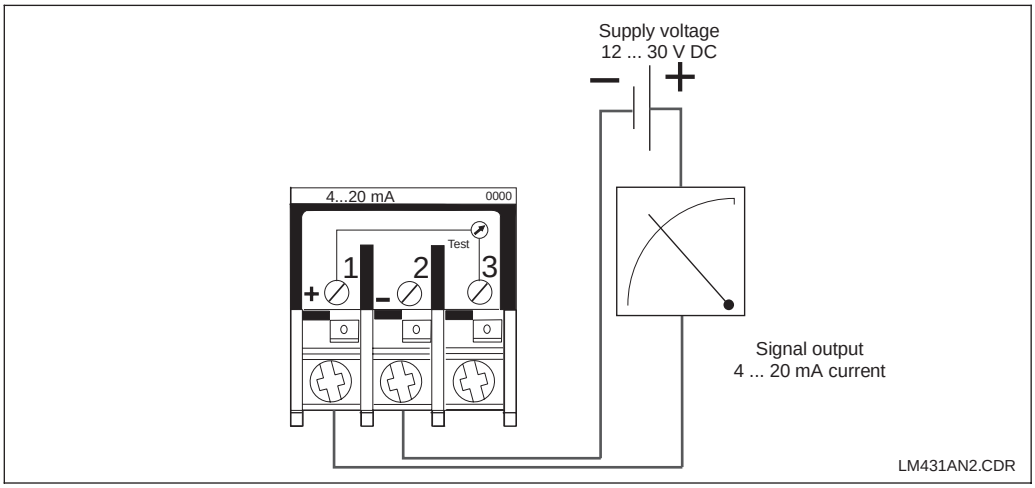

Fig. 3.19 Electrical connection

Note:

- Keep the screen ground line as short as possible. Connect the screen directly to the ground terminal. This also applies to connection of junction box VBM.
- If the instrument is mounted on a post, ground the post to increase immunity to interference. Running the cable in the post will improve interference suppression.
- Immunity to interference is only guaranteed when the instrument is grounded via the shielded two-wire line.

Resistance

The required minimum supply voltage of the transmitter depends on the resistance of the evaluation instrument connected.

The following diagram shows the required supply voltage when connecting the HART interface and the maximum admissible resistance in the transmitter circuit.

The maximum admissible resistance R_{max} is derived from the following formula:

$$R_{max} = \frac{U_V - U_M}{I_{max}}$$

with U_V = supply voltage of the transmitter circuit (DC)

U_M = terminal voltage of the transmitter (12 V DC)

I_{max} = maximum current of the transmitter (22 mA)

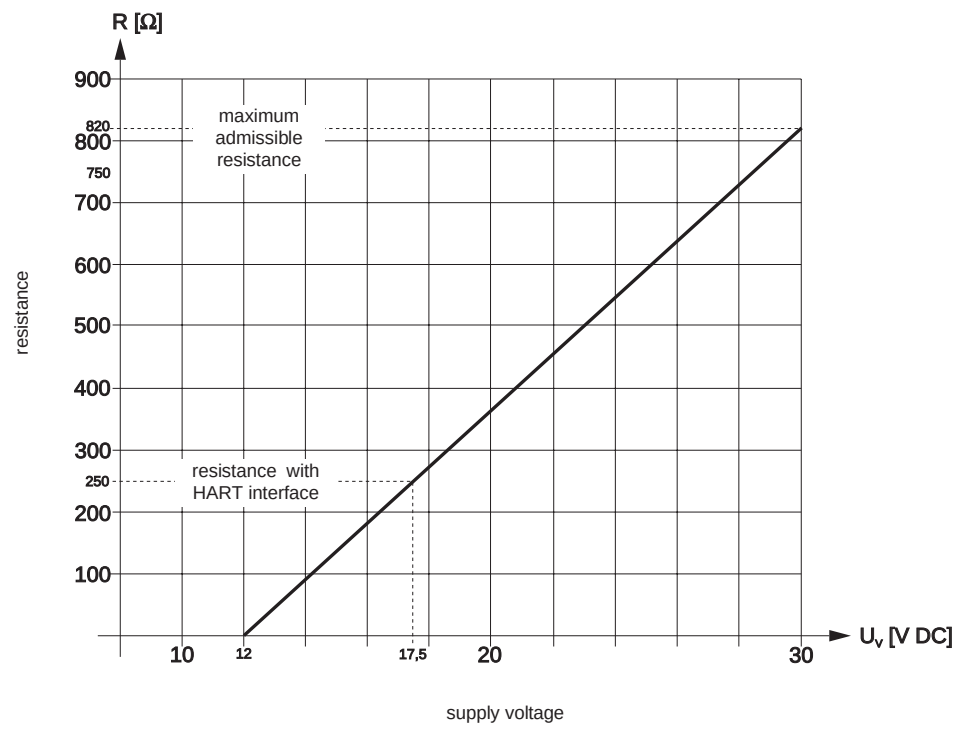

Fig. 3.20 Admissible resistance in the transmitter circuit

3.6 Connection of MyPro in Ex area

Connection of MyPro CLM 431-H

The CLM 431-H instrument approved according to directive 76/117/EC may be installed in Ex zone 1 or 2. Observing the european directive IEC 60079-14, the intrinsically safe sensor circuit (ia) may also pass through zone 0.

Connection of MyPro CLD 431-H

The CLD 431-H instrument approved according to directive 76/117/EC may be installed in Ex zone 1 or 2.

Only devices with an intrinsically safe output circuit may be connected to Ex versions of the measuring transmitter.

Warning:

The display and connection compartment covers must remain closed during operation.

Note:

Also observe the safety notes for instrument installation in explosive atmospheres in chapter 2.7 of these operating instructions.

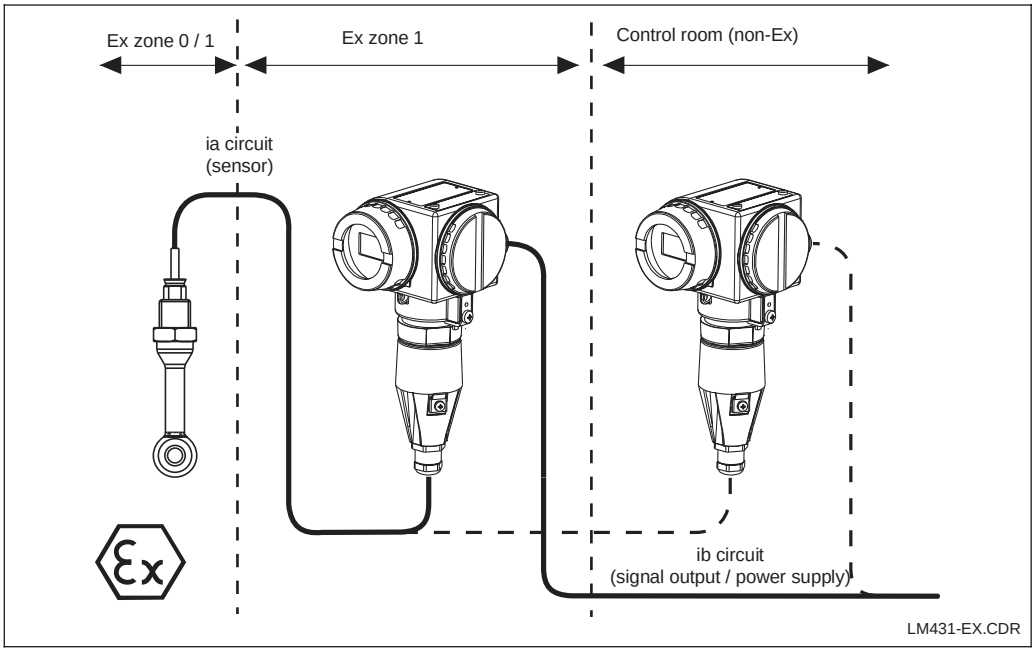

Fig. 3.21 Transmitter and measuring cell in Ex area

4 Operation

4.1 Start-up

Note:

- Familiarise yourself with the operation of the measuring instrument before switching it on for the first time!
- Before power-up, check that all connections have been properly made!
- Make sure that the measuring cell is immersed in the medium to be measured or a calibration solution. This ensures that a plausible value will be displayed.

4.2 Power-up, factory settings

Fig. 4.1 Conductivity measurement

Fig. 4.2 Concentration measurement

The MyPro CLM 431 / CLD 431 does not have an “ON switch”. When power is applied, the instrument performs a self-test and then starts up in the measuring mode using the parameters last set. The display should be similar to one of the figures below. Of course, the display value may be different. µS/cm or mS/cm on the display stands for conductivity, % stands for concentration measurement.

If the display indicates a plausible value, the cell constant can be entered, allowing the transmitter to display the measured values correctly. The instrument is then ready for measurement.

Use the function “Un It” to switch between the operating modes conductivity and concentration, see chapter 5.1.

Refer to chapters 4.6.5 and 5 for notes on calibration.

4.3 Operating concept and operating elements

The intelligent MyPro CLM 431 / CLD 431 transmitter can be operated in the field with 4 keys or via the HART interface (hand-held terminal or Commuwin II) or via PROFIBUS-PA with Commuwin II.

The 4 keys are located on the side of the instrument under a hinged cover and can be actuated with a pointed object, such as, for example, the tip of a ball point pen.

The printing on the adhesive label above the key pad shows the key arrangement .

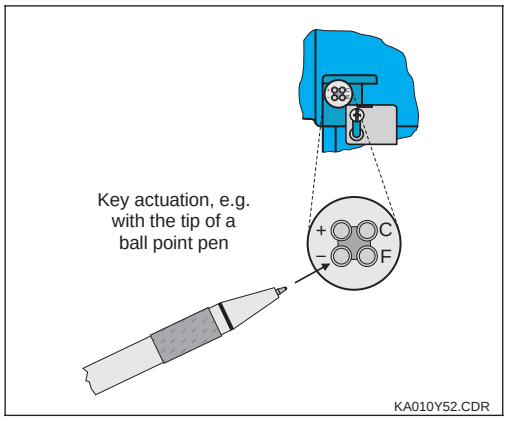

Fig. 4.3 Keypad

The following functions can be accessed in the field via the keypad:

Operating level 1

- Verification of active settings (secondary parameters)
- Error diagnosis (diagnostic parameter)
- Current interface settings (instrument parameters)
- Calibration

Operating level 2

This level comprises all other settings, e.g. switching from conductivity to concentration measurement.

Key functions at operating level 1:

+ Select secondary parameter / set values

– Select diagnostic parameters / set values

F Instrument configuration

C Sensor calibration

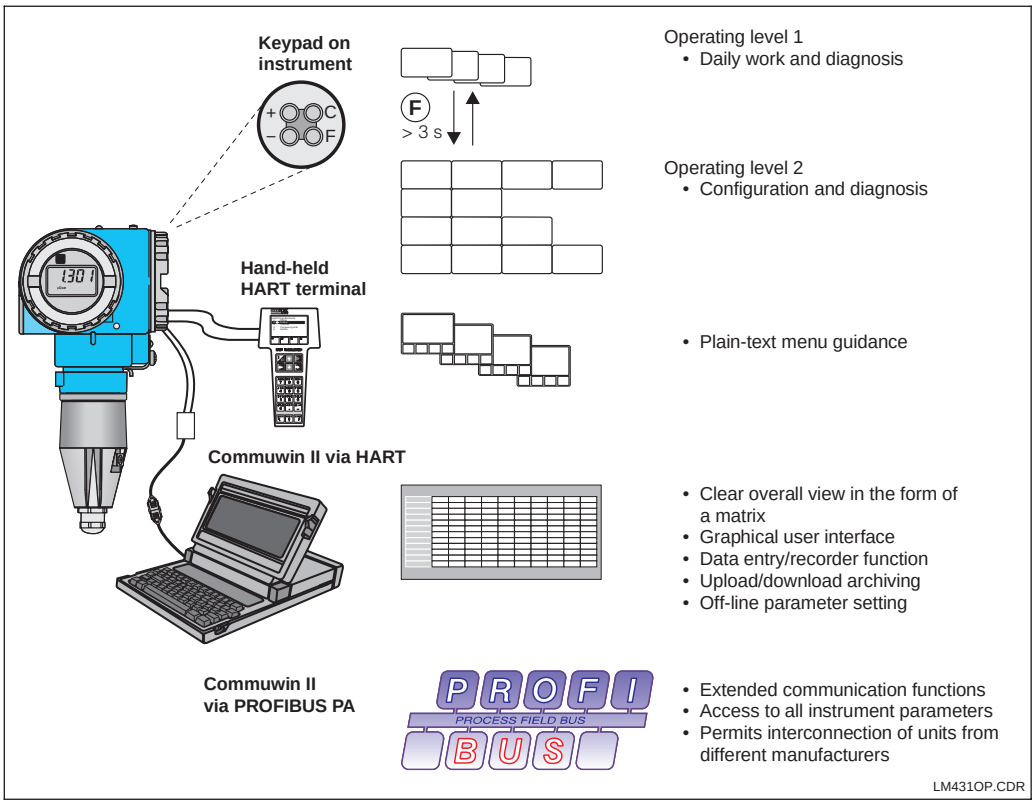

Fig. 4.4 Operation of MyPro CLM 431 / CLD 431 is possible via:
– keys on instrument
– hand-held HART terminal
– Commuwin II via HART
– Commuwin II via Profibus PA.

4.4 Display

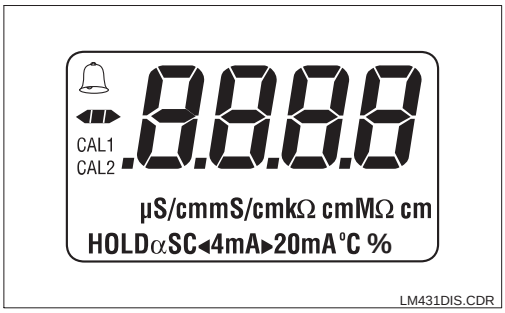

The figure on the left shows the complete MyPro display.

Various symbols are displayed depending on the instrument settings.

4.5 Locking concept

Access to instrument operation and write protection for field operation can be disabled via the keypad or the communication interface. The keypad has priority over the interface, i.e. an instrument which has been locked in the field cannot be unlocked via the communication interface.

Note:

- The previous locking status is retained after a power failure or reset.
- The factory setting (status at time of delivery) is ‘unlocked’.

Press „**+**“ and „**F**“ once at the same time

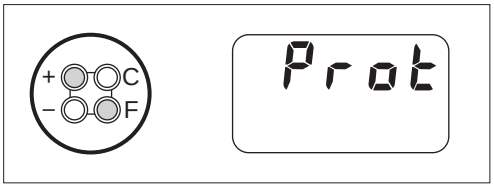

Instrument is locked

Parameters can only be read in the field and via communication; „Prot“ (= write-protected) is displayed when operation is attempted

Press „**–**“ and „**C**“ once at the same time

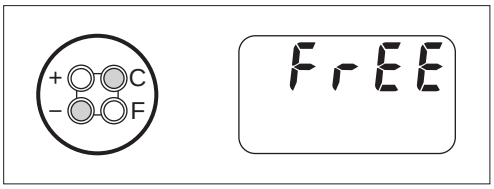

Instrument is unlocked

Unlocking / locking via interface and field operation (operating level 2):

See chapters 4.7 and 5.

4.6 Operating level 1

4.6.1 Display mode selection

The display normally shows the currently measured value. The four operating keys are used to access the various display modes explained on the pages to follow.

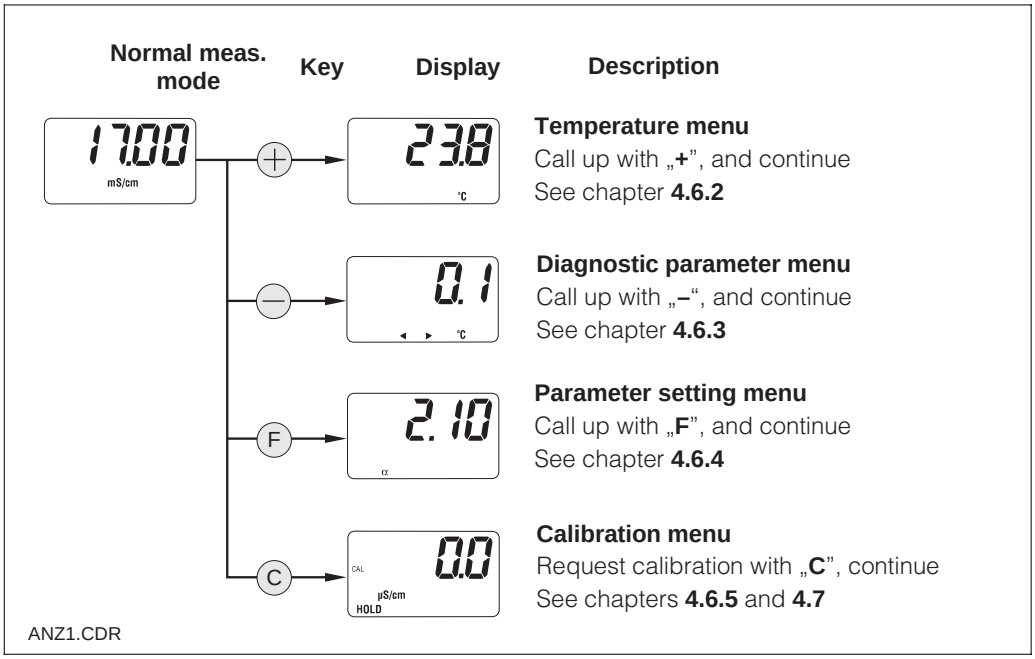

4.6.2 Secondary parameter menu (temperature)

The secondary parameter menu is used to display parameters that influence the currently displayed measured value (temperature).

If no other key is pressed for 30 s, the instrument automatically switches back to the measured value display.

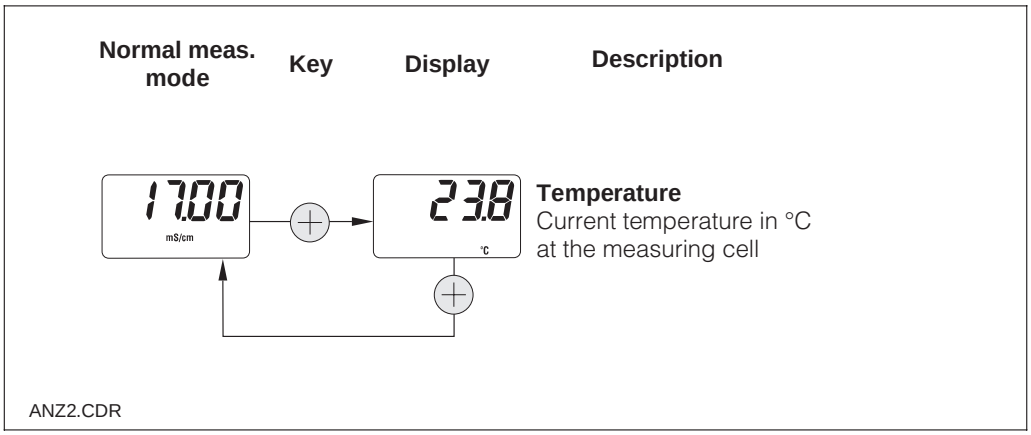

4.6.3 Diagnostic parameter menu

The diagnostic parameters show the current offset values and the diagnostic codes (error - messages) that are active, beginning with the highest priority (Prio_1).

If no other key is pressed for 30 s, the instrument automatically switches back to the measured value display.

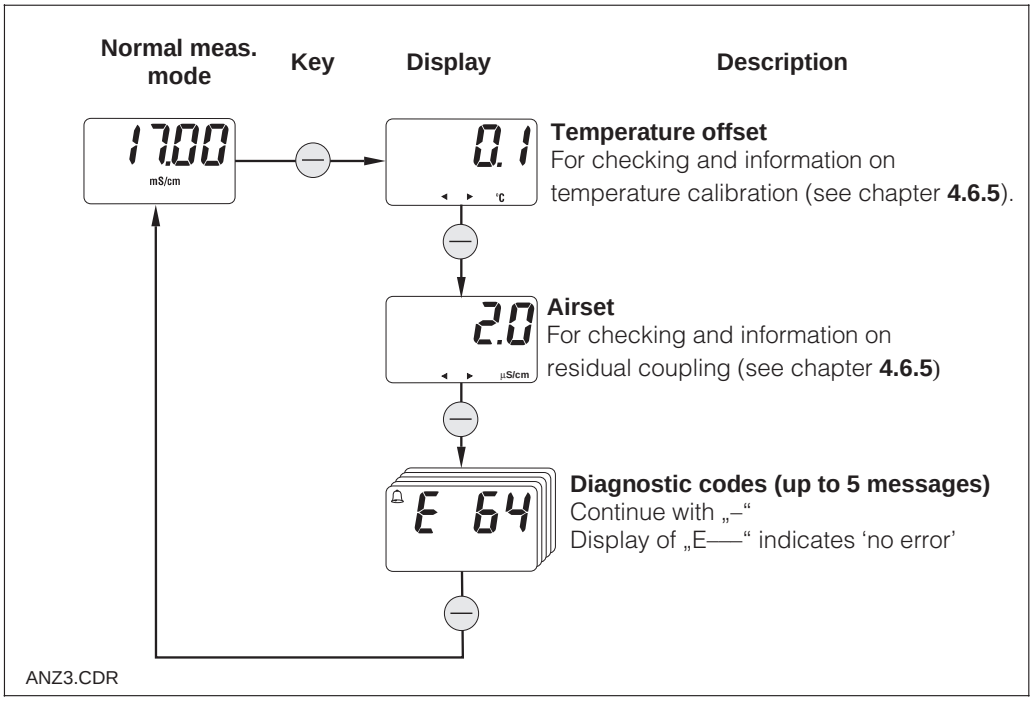

4.6.4 Parameter settings

This function can be used to display and set the values that are essential for start-up. These are:

- Temperature coefficient (α value)
- Cell constant
- Installation factor
- Meas. value for 4 mA current output
- Meas. value for 20 mA current output

The value being edited flashes. When the desired value has been entered, it is accepted with „**F**", and the system advances to the next parameter.

Adjustment ranges

Temperature coeff. α:	0.00 to 10.00 %/K
Cell constant C:	0.0025 to 99.99 cm^{-1}
Installation factor:	0.010 to 5.000
4/20 mA value:	20 µS/cm / 200 µS/cm 2 mS/cm / 20 mS/cm (depending on measuring range)

Note:

A minimum distance between the 4 and 20 mA values is required (see chapter 10) → an error is signalled if this condition is not fulfilled.

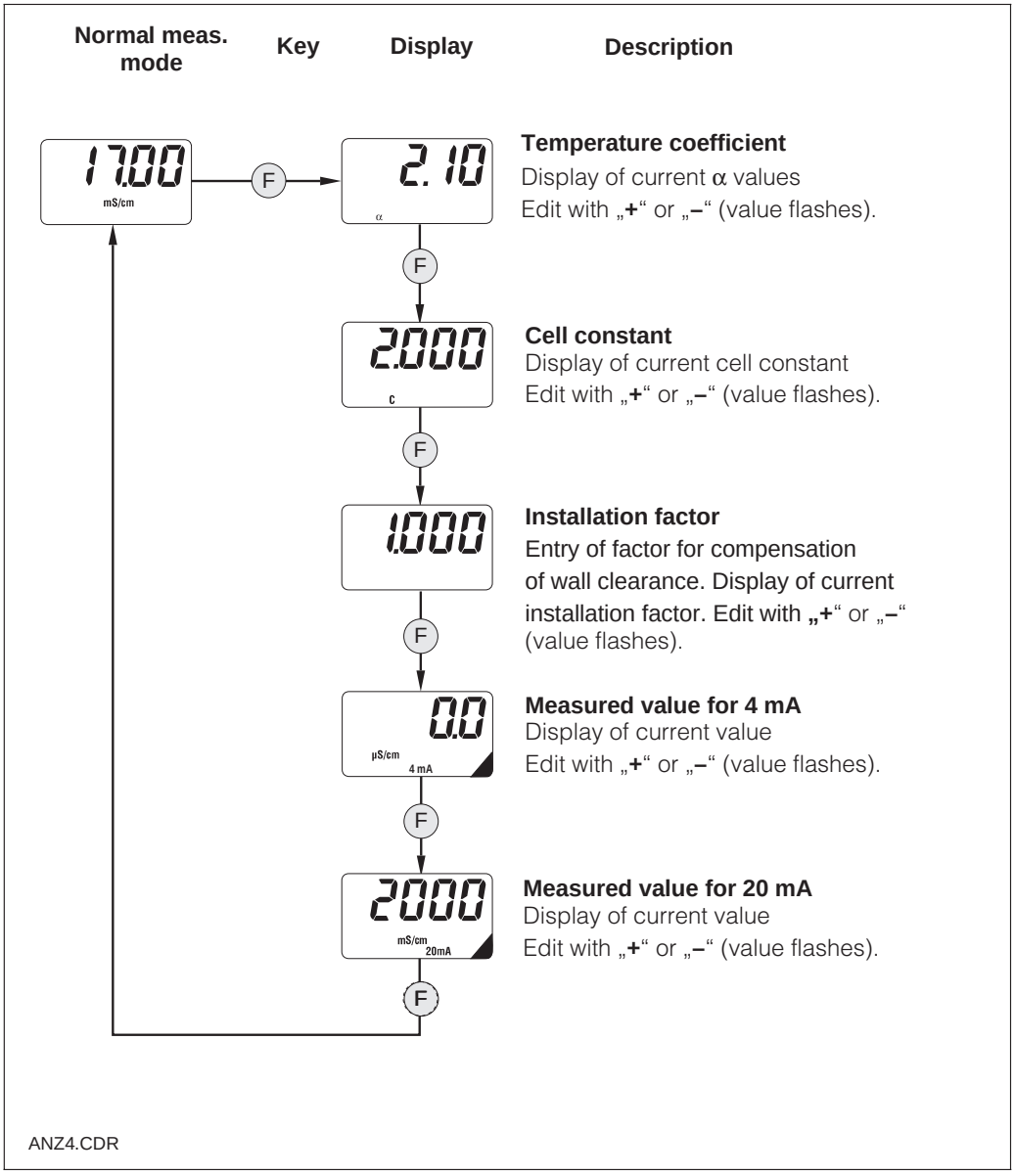

4.6.5 Calibration

The calibration menu of the MyPro CLM 431 / CLD 431 is used for temperature and conductivity calibration. The accuracy of the inductive conductivity measurement is influenced by the following quantities:

- Cell constant → depends on the mechanical design of the cell
- Installation factor → depends on the cell installation conditions
- Residual coupling → zero deviation, correction by Airset

The conductivity calibration, i.e. the determination of the cell constant, can be performed with or without automatic temperature compensation. The temperature coefficient or raw conductivity of the calibration solutions as a function of temperature are documented.

The calibration menu can be exited anytime by pressing the **„F“** key; an error message (calibration aborted) will be displayed.

Description of calibration types

Airset (application: measurement < 500 µS/cm)

The Airset process is an adjustment of the inductive measuring cell connected to the MyPro. The dry measuring cell is held in the ambient air (not in a liquid!) and adjusted to 0.0 µS/cm by pressing the “**C**” key in the “Air” calibration routine. The resulting offset value can be queried in the “diagnostic parameter” branch (with the “–” key) in the short-cut menu.

Calibration of cell constant (application: recalibration or when coats have formed)

During this type of calibration, the cell constant of the inductive measuring cell is determined by immersion in a sufficiently large vessel (distance to wall > 30 mm) containing a solution with a known conductivity value and temperature coefficient. The installation factor is not changed by this calibration. The value of the cell constant can be queried in the “parameter settings” branch (with the “**F**” key) in the short-cut menu.

Calibration of installation factor (application: pipe diameter < DN 110)

During this type of calibration, the installation factor of the built-in inductive measuring cell is determined. To do this, for example, the pipe is filled with a liquid of a known conductivity value and temperature coefficient or a precisely measured medium sample is taken to determine the required correction. The cell constant is not changed by this calibration process. The value of the installation factor can be queried in the “parameter settings” branch (with the “**F**” key) in the short-cut menu.

Note:

- When the measuring cell is installed in sufficiently large pipes (DN > 110) or tanks, the installation factor f is 1. The cell is calibrated via CAL.C (determination of cell constant).
- When installed in pipes with a diameter < DN 110, the installation factor of the built-in cell should be determined (“CAL.A”).

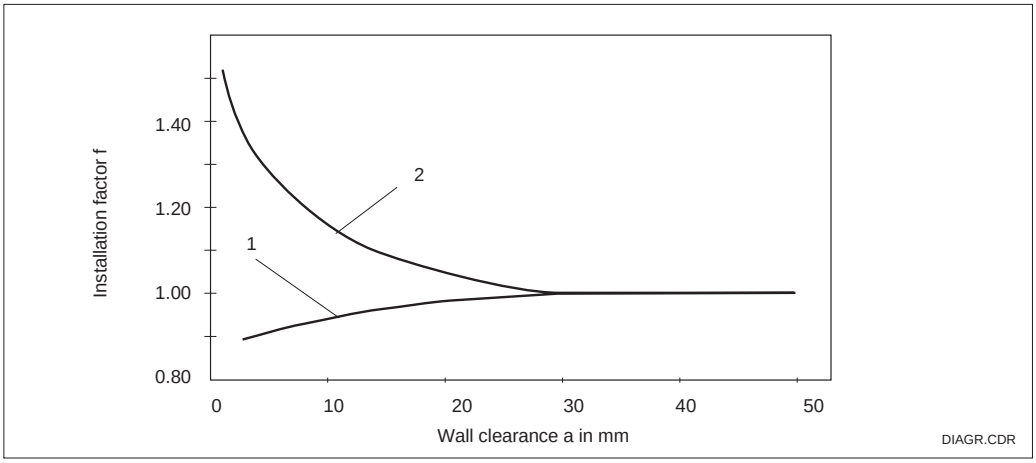

Fig. 4.5 Installation factor f depending on wall clearance
1 Conducting pipe
2 Insulating pipe

Calibration menu

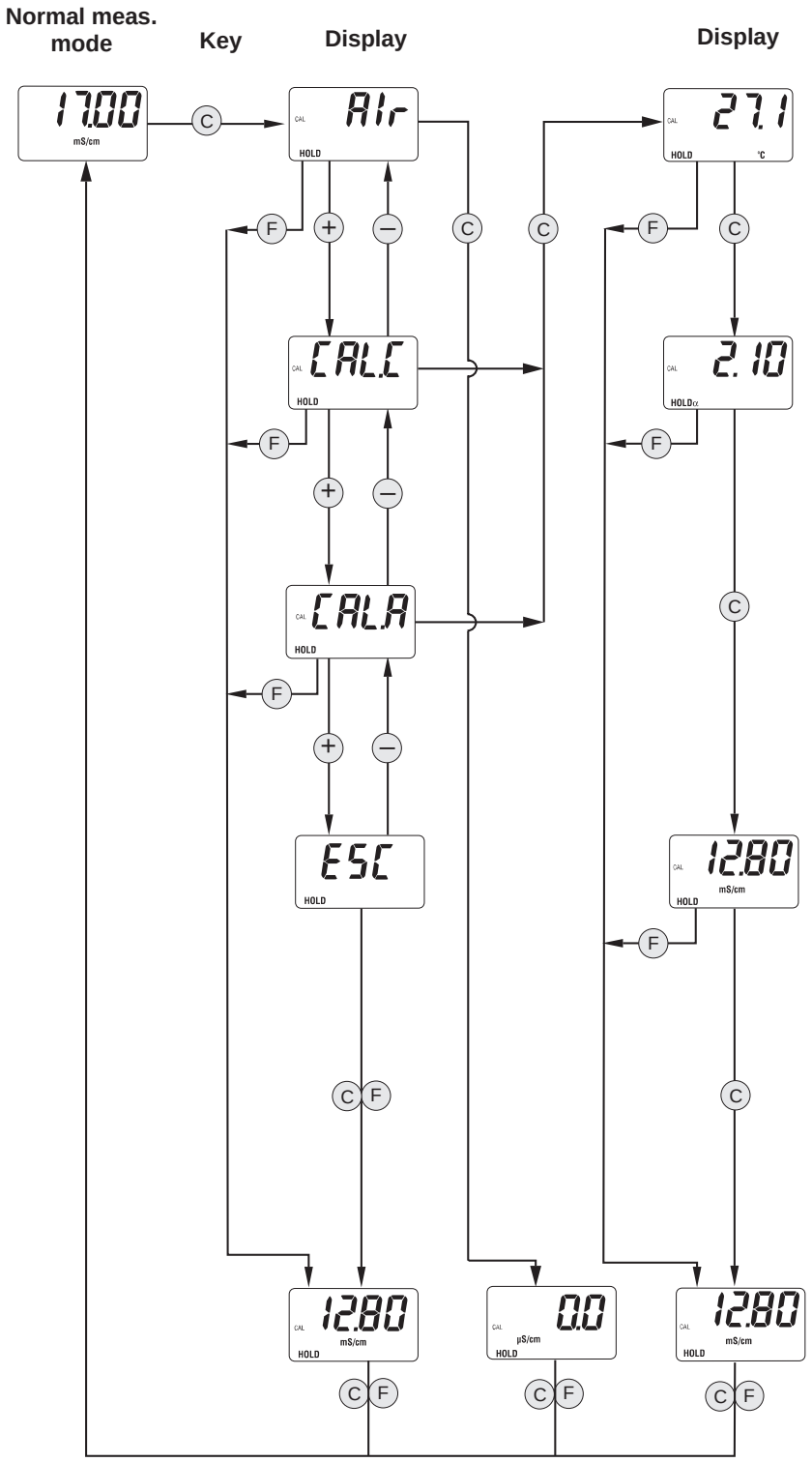

Temperature calibration
The measured value determined by the MyPro is displayed. This value can be edited directly with „**+**“ and „**–**“ for adjustment to the correct value. The MyPro automatically determines the temperature offset (see chapter **4.6.3** „Diagnostic parameter menu“)

Temp. coefficient of calibration solution
If the temperature of the calibration solution differs from the reference temperature (instrument), you must choose one of the following alternatives to proceed:

1.) **Calibration with uncompensated conductivity,** i.e. $\alpha = 0$.
Enter the uncomp. conductivity of the calibration solution at the current temperature.

2.) **Calibration with automatic temperature compensation,**
Enter the α value of the calibration solution at the current temperature.

Conductivity calibration
Entry of conductivity of calibration solution with „**+**“ and „**–**“
Depending on preceding step:
For 1.) Determine uncomp.conductivity of calibration solution at current temperature and enter.
For 2.) Enter compens. value of calibration solution at reference temperature.
Cell constant editing may be performed by entering the cell constant from the nameplate or from the quality certificate of the measuring cell.

End of calibration
Continue measurement with „**C**“ or „**F**“; the current output is re-enabled.

ANZ5.CDR

4.7 Operating level 2

Operating level 2 covers all operating functions of the MyPro not included in level 1. These functions are arranged in menus by function groups.

- This level is **accessed** from the normal measuring mode by pressing and holding the **„F“ key for more than 3 seconds**.
- Press the „**+**“ or „**–**“ key to select the desired function group.
- The function groups and functions within a function group are **accessed** by pressing the **„F“ key**.
- When the desired function appears on the display, the value or **selection can be changed with „+“ or „–“**.
- Press the **„F“ key** to **acknowledge** and proceed.
- The „advanced“ operating level is **exited** by pressing the **„F“ key for more than 3 seconds** or **automatically after 3 minutes** if no other key is pressed (value is not stored).

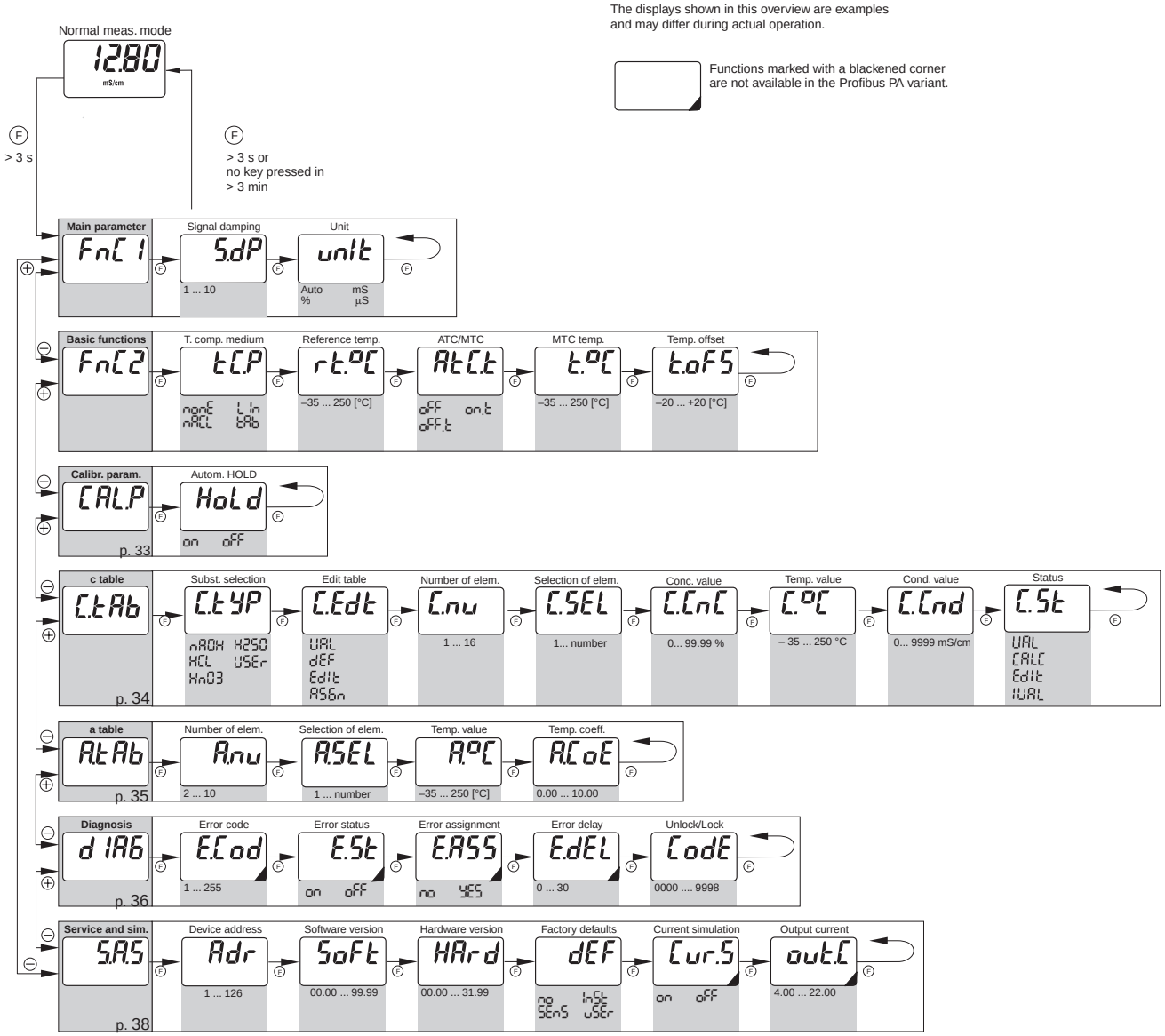

5 Functional description

This chapter contains detailed descriptions of and information on the individual MyPro functions referred to the matrix representation of the hand-held terminal or Commuwin II.

5.1 Main parameters

FnC1 Function/display	Matrix VH	Function group MAIN PARAMETERS Description	Setting Default	Setting Customer
Measured value 17.00 mS/cm	VH 00	Displays the currently measured conductivity or concentration value.	–	
Temperature 23.8 °C	VH 01	Displays the currently measured temperature value (see chapter 4.6.2). **Note:** This is only displayed if the temperature measurement is enabled (see VH 17: type of temperature compensation). **Value range:** –35.0 ... 250.0 °C	–	
Operating state	VH 02	Output of current operating state, e.g. indicates when field calibration is currently being performed. **Note:** This function is only intended for operation with the Commuwin II user interface or the hand-held HART® terminal. **Commuwin:** Meas., cal. active, parameter setting	–	
Unit of main parameter unit	VH 03	Selects the unit for the parameter measured or the operating mode conductivity or concentration. **Note:** • The conductivity measuring ranges are only relevant for the data transfer via the interface. The unit on the 4-digit field display changes changes automatically based on the auto range function. • Caution: Changing the operating mode resets the current output values to default. **Value range:** µS/cm, mS/cm, S/m %	**µS/cm or %**	

Operating level 2

FnC1 Function/display	Matrix VH	Function group **MAIN PARAMETERS** Description	Setting Default	Customer
Input damping 5.dP	VH 04	This function describes the transmitter's response to the input signal. The value entered here corresponds to the number of samples used for averaging. **Value range:** 1 ... 10	**1**	
Set 4 mA value 0.0 µS/cm 4mA	VH 05	Entry of conductivity or concentration value for a current value of 4 mA (see chapter 4.6.4). **Note:** A specific minimum distance from the 20 mA value must be observed. **Value range:** 0 ... 9999 mS/cm 0 ... 99.99 % **Minimum distance:** Meas. value between 0 ... 199.9 µS/cm: 20 µS/cm Meas. value between 200 ... 1999 µS/cm: 200 µS/cm Meas. value between 2 ... 19.99 mS/cm: 2 mS/cm Meas. value > 20 mS/cm: 20 mS/cm	**0.0 mS/cm resp. 0 %**	
Set 20 mA value 2000 mS/cm 20mA	VH 06	Entry of conductivity or concentration value for a current value of 20 mA (see chapter 4.6.4). **Note:** A specific minimum distance from the 4 mA value must be observed. **Value range:** 0 ... 9999 mS/cm 0 ... 99.99 % **Minimum distance:** Meas. value between 0 ... 199.9 µS/cm: 20 µS/cm Meas. value between 200 ... 1999 µS/cm: 200 µS/cm Meas. value between 2 ... 19.99 mS/cm: 2 mS/cm Meas. value > 20 mS/cm: 20 mS/cm	**2000 mS/cm resp. 99.99 %**	
Current range	VH 07	Displayed when the minimum distance for the current range has not been observed. **Value range:** invalid	**depends on measuring range**	

Functions marked this way are not available in the Profibus instrument variant.

5.2 Basic functions

FnC2	Function group **BASIC FUNCTIONS**			
Function/display	**Matrix VH**	**Description**	**Setting**	
			Default	**Customer**
Remote calibration control	VH 10	This function controls the calibration sequence when operated via the interface (see chapter 4.6.5). **Note:** The measuring system can be calibrated in the field or via the interface (hand-held HART® terminal or Commuwin II).	**–**	
Temperature coefficient α 2.10 α	VH 11	Entry of linear temperature coefficient for the process in measuring mode. **Value range:** 0.00 ... 10.00 % /K	**2.10 % / K**	
Temperature comp. type tCP	VH 12	Selection of medium temperature compensation type **Value range:** none = none Lin = linear NaCl = NaCl tAb = α table	**linear**	
Reference temperature rt.°C	VH 13	Reference temperature for automatic temperature compensation **Value range:** –35.0 ... 250.0 °C	**25 °C**	
Airset offset 17.00 mS/cm	VH 14	Adjustment of conductivity measurement via a measurement in air.	**0.000 µS/cm**	
Cell constant 2.000 c	VH 15	Entry of cell constant or information on cell constant determined during calibration. **Value range:** 0.0025 ... 99.99 cm^{-1}	**2 cm^{-1}**	
Installation factor 1.000	VH 16	Entry of installation factor for compensation of influence of pipe material and geometry (see diagram in chapter 4.6.5.). **Value range:** 0.010 - 5.000	**1.000**	

Operating level 2

FnC2	Function group **BASIC FUNCTIONS**			
Function/display	**Matrix VH**	**Description**	**Setting**	
			Default	**Customer**
Temperature compensation type AtCt	VH 17	Switches the temperature measurement on/off and toggles between manual and automatic temperature compensation (MTC/ATC). **Note:** • If set to „off+MTC“, the preset MTC temperature is used for compensation • If set to „on+MTC“, the temperature can be additionally measured via a temperature sensor and output via the HART® interface or in the field • If set to „on+ATC“, the value measured by the temperature sensor is used for compensation **Value range:** off = 0 = off + MTC off.t = 1 = on + MTC on.t = 2 = on + ATC	**on + ATC**	
MTC temp. t.°C	VH 18	Entry of reference temperature for manual temperature compensation. **Value range:** –35.0 ... 250.0 °C	**25.0 °C**	
Temperature offset t.oFS	VH 19	Adjustment of temperature measurement by an offset value. Entry of an offset value or of the offset determined during calibration (at operating level 1, this value can only be viewed but not edited). **Note:** Only exists if temperature measurement has been switched on (see VH 17 „Temperature compensation type“). **Value range:** –20.0 ... +20.0 °C	**0.0 °C**	

■ Operating level 2

5.3 Calibration parameters

CALP Function/display	Matrix VH	Function group **CALIBRATION PARAMETERS** Description	Setting Default	Customer
Entry of calibration solution	VH 20	Conductivity of calibration solution **Note:** The unit is µS/cm or mS/cm. **Value range:** 0.000 µS/cm to 9999 mS/cm	**1000 µS/cm**	
Temperature coefficient α of calibr. solution CAL 2.10 HOLDα	VH 21	Temperature coefficient of calibration solution for calibration with automatic temperature compensation. **Note:** The α value of the solution is temperature-dependent and must be determined for the current calibration temperature. **Value range:** 0.00 ... 10.00 % / K	**2.10 % / K**	
Temperature of calibr. solution CAL 27.1 HOLD °C	VH 23	Temperature calibration: Field for entry of current calibration temperature. The temperature offset is automatically computed from this and displayed in field VH 19 “Temperature offset”. **Note:** •With ATC: Entry of actual temperature •With MTC: Entry of MTC calibration temp. **Value range:** –35.0 ... 250.0 °C	**–**	
Automatic HOLD during calibration HoLd	VH 29	Activates or deactivates the automatic HOLD function for the current output during calibration. **Value range:** Autom. HOLD during calibration off Autom. HOLD during calibration on	**on**	

Functions marked this way are not available in the Profibus instrument variant.

Operating level 2

5.4 Concentration table

Use the function "Un It" in position VH 03 to change the operating mode to concentration. There are characteristic lines for various selectable substances stored in tables.

You can select the substances in position VH 50. The positions VH 51 - 57 refer to the user-selectable table "User" in VH 50.

Function group: CONCENTRATION TABLE (C.tAb)				
Function/display	**Matrix VH**	**Description**	**Setting: Default**	**Setting: Customer**
Subst. selection C.tYP	VH 50	Selection of medium for determination of concentration. **Value range:** NaOH 0 - 15%, HCl 0 - 20%, HNO_3 0 - 25%, H_2SO_4 0 - 30%, User	**NaOH**	
Edit table C.Edt	VH 51	Selection of table to be edited. **Value range:** VAL = valid table, dEF = reset table, Ed It = edit table, ASGn = accept table	VAL	
Number of elements C.nu	VH 52	Entry of number of elements. **Value range:** 1 ... 16	**1**	
Selection of elements C.SEL	VH 53	Selection of elements. **Value range:** 1 ... number	**1**	
Conc. value C.CnC	VH 54	Entry of concentration value. **Value range:** 0 ... 99.99 %	**0.00 %**	
Temp. value C.°C	VH 55	Entry of temperature value. **Value range:** – 35 ... 250 °C	**0 °C**	
Conduct. value C.Cnd	VH 56	Entry of conductivity value. **Note:** The required minimum distance at similar temperature values is 30 mS/cm. **Value range:** 0 ... 9999 mS/cm	**0.0 mS/cm**	
Status C.St	VH 57	Concentration table status. **Value range:** VAL = ok, CALC = please wait, Ed It = in use, IVAL = invalid	VAL	

5.5 Alpha table

In order to implement a special, medium-specific temperature compensation function, a table is stored in the MyPro CLM 431 / CLD 431. The α characteristic is entered in a table which may contain 2 to 10 elements. Each table element consists of an α value and the associated temperature.

The α table is activated via the “tab” mode in matrix position VH 12. However, the α table should not be activated before the values have been edited, since changes become effective immediately (resulting in error message 150 in position VH 62).

Programming sequence for α table:
1. Enter number of elements (VH 60)
2. Select element 1 (VH 61)
3. Enter temperature value 1 (VH 62)
4. Enter α value 1 (VH 63)
5. Repeat steps 2 to 4 for all other elements of the table

Function group **α TABLE**				
Function/display	**Matrix VH**	**Description**	**Setting**	
			Default	**Customer**
Number of elements A.nu	VH 60	Entry of number of table elements **Value range:** 2 ... 10	**2**	
Selection of element A.SEL	VH 61	Programming of the selected table element starts with the selection of the element. This is followed by the entry of the temperature value and corresponding α value for the table element. **Value range:** 1 ... number of elements	**1**	
Temperature value A.°C	VH 62	Temperature value of current table element **Note:** The temperature values must increase from one element to the next. The required minimum distance between temperature values is 10 K. Error message E150 indicates an incorrect temperature entry. **Value range:** –35 ... 250 °C	**0**	
α value A.CoE	VH 63	Temperature coefficient of current table element. **Value range:** 0.0 ... 10.00 % / K	**2.10 % / K**	
Status	VH 64	Status of α table. **Value range:** ok, please wait, in use, invalid	**ok**	

Operating level 2

5.6 Diagnosis

Function group **DIAGNOSIS** **This function group can be used to define the error current assignments for each individual error and to disable (lock) field operation.** d IAG				
Function/display	**Matrix VH**	**Description**	**Setting**	
			Default	**Customer**
Selection of diagnostic code E.Cod	VH 80	Selection of a diagnostic (error) code (see chapter 7.2). **Value range:** E 1 ...E 150	**1**	
Error status E.St	VH 81	Display of status for selected diagnostic code. **Note:** The error state can be evaluated with the hand-held HART® terminal or with the Commuwin II user interface. **Value range:** off = 0 = inactive on = 1 = active	**depending on code**	
Error assignment E.ASS	VH 82	This function is used to define whether or not an error current is output for the selected error code on the current output. **Note:** If set to „**yes**“ (effective), an error current is output for an error set by the MyPro. A diagnostic code with the setting „**no**“ (not effective) has no effect on the current output. **Note:** The error current is 22 mA. **Value range:** yes = 1 no = 0	**depending on code**	
Error current delay E.dEL	VH 83	Sets the delay for a diagnostic code for which the error current assignment „**yes**“ (effective) has been set. If such a diagnostic code is set by the MyPro, this error becomes effective as an error current after the delay defined here. **Note:** This delay applies to all diagnostic codes. **Value range:** 0 ... 30 s	**2 s**	

Functions marked this way are not available in the Profibus instrument variant.

Operating level 2

Function group **DIAGNOSIS** **This function group can be used to define the error current assignments for each individual error and to disable (lock) field operation.** dIAG				
Function/display	**Matrix VH**	**Description**	**Setting**	
			Default	**Customer**
Unlock/lock CodE	VH 89	Unlock/locks field operation (see chapter 4.5). **Note:** Field operation can be locked and unlocked with the hand-held HART® terminal, with the Commuwin II user interface or in the field. Locking via the keypad has precedence over software locking. **Note:** 0097 = instrument unlocked (any other entry locks the instrument) 9999 = instrument locked in field with key combination “+” and “F” (unlocking via the HART® interface or via operating level 2 is not possible) **Value range:** 0000 ... 9998	**0097**	

Functions marked this way are not available in the Profibus instrument variant.

Operating level 2

5.7 Service and simulation

Function group: SERVICE/SIMULATION (S.A.S)				
Function/display	**Matrix VH**	**Description**	**Setting: Default**	**Setting: Customer**
Diagnostic code E 64	VH 90	Display of active diagnostic codes with the highest priority levels (see chapters 4.6.3 and 7.2). **Value range:** E 1 ... E 150	–	
Device address Adr	VH 92	Entry of device address. **Note:** Only available for PROFIBUS-PA.	**126**	
Software version SoFt	VH 93	Display of software version of instrument.	**depends on instrument version**	
Hardware version HArd	VH 94	Display of hardware version of instrument.	**depends on instrument version**	
Factory settings (set default) dEF	VH 95	This function is used to selectively reset the data areas of the instrument to the factory settings. **Value range:** no = 0 = no reset inst = 1 = instrument (data specific to instrument) sens = 2 = sensor (data specific to sensor) user = 3 = user (combination of 1+2)	**no**	
Output current simulation Cur.S	VH 98	This function is used to switch the output current simulation on or off. **Note:** Reset back to „**0**“ (simulation off) after simulation. **Value range:** off = 0 = off on = 1 = on	**0**	
Current value OutC	VH 99	Entry of a current value (independent of the measurement) to be output at the current output. **Value range:** 4.00 ... 22.00 mA	**last current value**	

Functions marked this way are not available in the Profibus instrument variant.

Operating level 2

5.8 User info

Function group **USER INFO**				
Function/display	**Matrix VH**	**Description**	**Setting**	
			Factory	**Customer**
Tag number	VH A0	Entry of a measuring point designation (tag number). **Value range:** Any sequence of 8 alphanumeric characters **Note:** This function is only available for operation via the HART interface but not via Profibus.	“ ” **(8 spaces)**	

■ Operating level 2

6 Interfaces

6.1 HART®

6.1.1 HART® with hand-held terminal or HART® Communicator

In addition to field operation, the MyPro CLM 431 / CLD 431 transmitter can also be accessed via the universal hand-held terminal DXR 275 or a PC with a modem using the HART® protocol to query or change parameter settings. The interface also allows to query the measuring values.
This chapter contains essential information on:

- electrical connection
- operation of HART Communicator
- E+H operating matrix for HART®

Note:

Refer to the DXR 275 operating instructions for details on the hand-held terminal.

Connection of hand-held terminal DXR 275

There are two alternatives for connecting the hand-held terminal (see fig. 6.1):

- Direct connection to the measuring transmitter via terminals 1 and 2
- Connection via the 4 ... 20 mA analog signal line

In both cases, the measuring circuit must have a resistance of at least 250 Ω between the power source and the hand-held terminal. The max. load at the current output depends on the supply voltage. The measuring transmitter input voltage for the maximum current consumption of 22 mA must be at least 12 V.

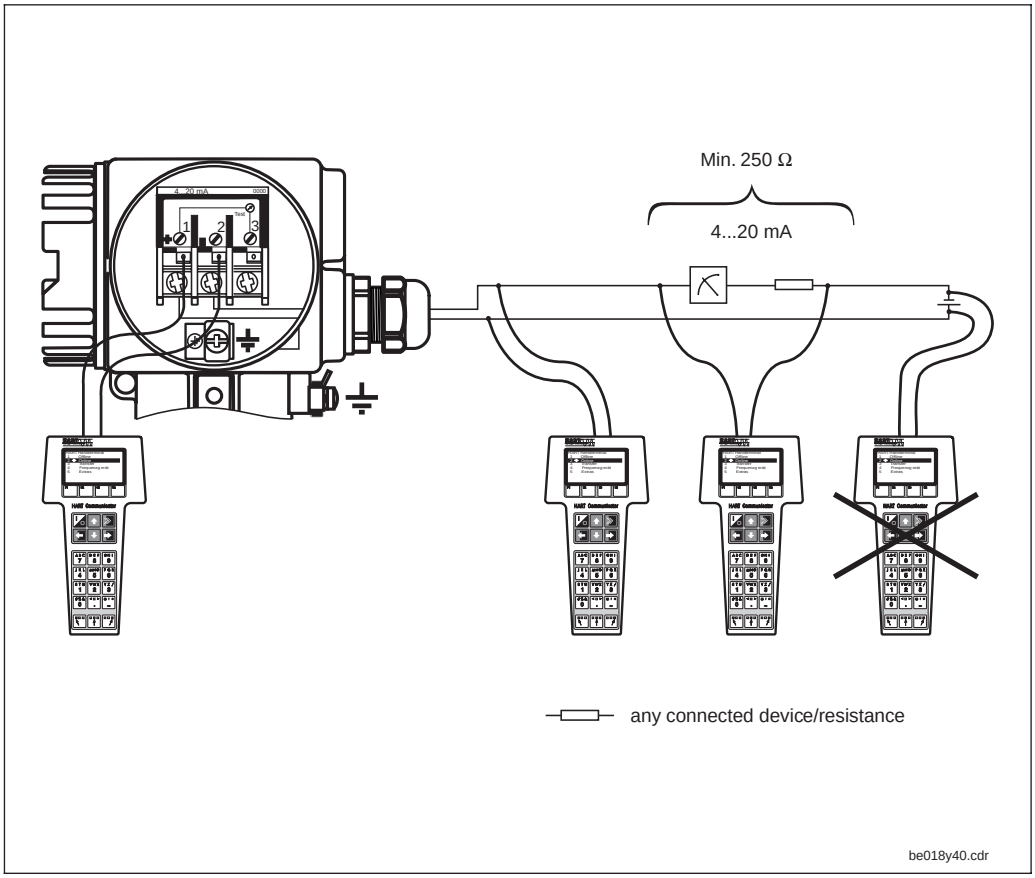

Fig. 6.1 Electrical connection of hand-held HART® terminal

Operation of MyPro CLM 431 / CLD 431 with the HART® Communicator

Operating the MyPro CLM 431 / CLD 431 measuring system via the hand-held terminal is quite different from field operation via the pushbuttons on the keypad. When using the HART® Communicator, all MyPro CLM 431 functions are selected at different menu levels (see figure 6.2) and with the aid of a special E+H operating menu (see figure 6.3).

Note:

- The MyPro measuring instrument can only be controlled with a HART® Communicator if the proper software (DD=device description of MyPro CLM 431 / CLD 431) is installed in the Communicator. If this is not the case, the memory module may have to be replaced, or the software may have to be adapted. Contact E+H Service if you have any questions.
- All MyPro functions are described in detail in chapter 5.

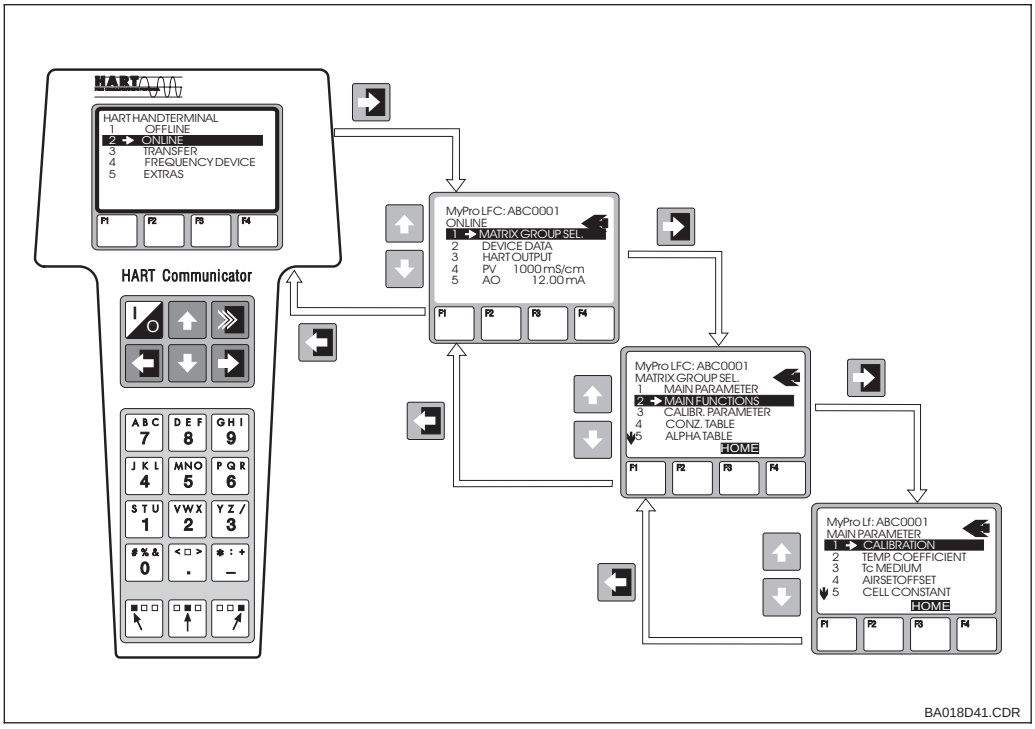

Fig. 6.2 Operation of hand-held terminal

Procedure:

1. Switch on the hand-held terminal:
   a) Measuring instrument not connected
   ➜ The HART® main menu appears. This menu level appears for any HART® programming, i.e. independent of the instrument type. Refer to the „Communicator DXR 275“ operating instructions for further information.
   b) Measuring instrument is connected ➜ The program goes directly to the „Online“ menu level.

The „Online“ menu level is used to display the current data measured, such as conductivity, temperature, etc., and also allows you to access the MyPro CLM 431 / CLD 431 operating matrix via the „matrix group selection“ line (see figure 6.2). All function groups and functions accessible through HART are displayed in this matrix in a systematic arrangement.

2. The function group is selected using „matrix group selection“ (e.g. basic functions), and then the desired function, e.g. remote calibration. All settings or numeric values relating to the function are immediately displayed.

3. Enter numeric value or change setting as required.

4. Press function key „F2“ to call up „SEND“.
   Press the F2 key to transfer all the values entered/ settings changed with the hand-held terminal to the MyPro CLM 431 / CLD 431 measuring system.

5. Press the HOME function key „F3“ to return to the „Online“ menu level. Here, you can read the current values measured by the MyPro CLM 431 / CLD 431 instrument with the new settings.

HART® operating matrix

If the instrument has been locked in the field, the parameters cannot be changed via the hand-held terminal (see chapter 4.5)

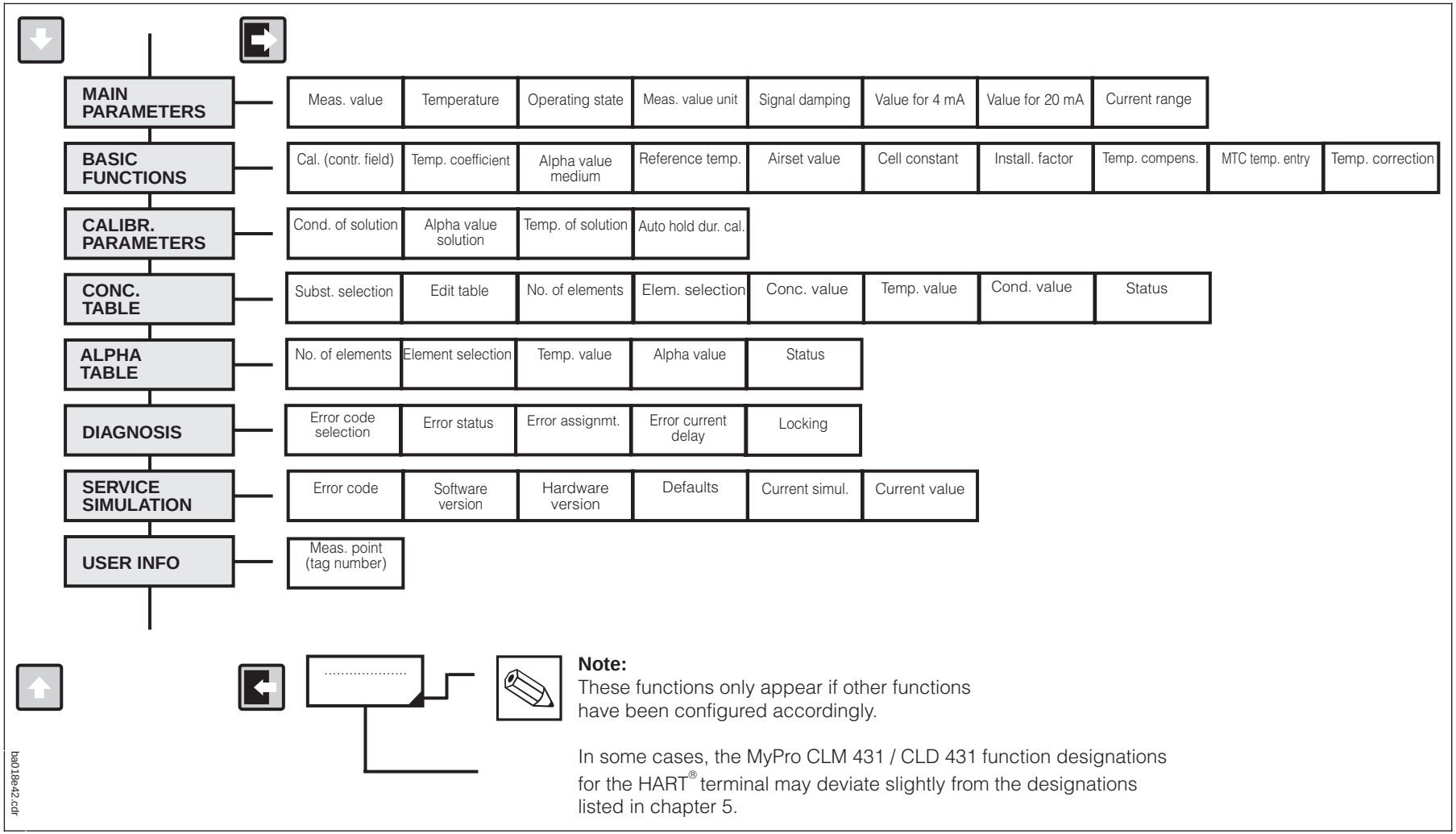

Note:
These functions only appear if other functions have been configured accordingly.

In some cases, the MyPro CLM 431 / CLD 431 function designations for the HART® terminal may deviate slightly from the designations listed in chapter 5.

Fig. 6.3 HART® operating matrix for MyPro CLM 431 / CLD 431 (conductivity)

6.1.2 HART® with Commuwin

Description

The MyPro CLM 431 / CLD 431 measuring transmitter can also be operated via its HART® interface using Commuwin II. Commuwin II is a graphical control program for intelligent measuring instruments and can handle various communication protocols. The program supports the following functions:

- On-line and off-line measuring transmitter parameter changes
- Loading and saving of instrument data (upload/download)

A program extension additionally supports recording of measured values on a line recorder.

Commuwin offers two alternatives for operation and parameter changes (**instrument data** menu):

- **Graphical operation**
- **Matrix operation**

Note:

Refer to the Commuwin II operating instructions (BA 124F/00/en) for a detailed description.

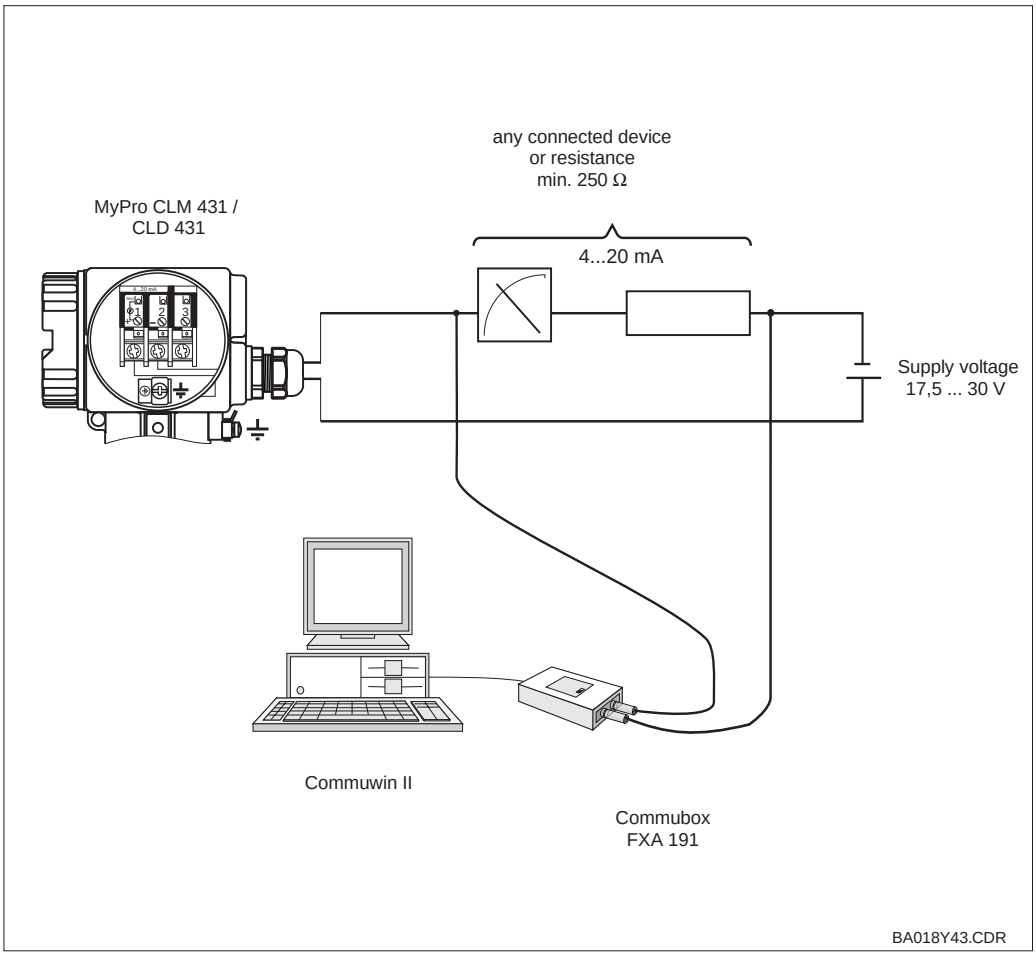

Fig. 6.4 Electrical connection of the Commubox

Commuwin II operating matrix

		H0	H1	H2	H3	H4	H5	H6	H7	H8	H9
V0	**MAIN PARAMETERS**	Meas. value	Temperature	Operating state	Unit of meas. value	Signal damping	Value for 4 mA	Value for 20 mA	Current range		
V1	**BASIC FUNCTIONS**	Calibration (contr. field)	Temperature coefficient	α value of medium	Reference temperature	Airset value	Cell constant	Installation factor	Temperature compens.	Entry of MTC temp.	Temperature correction
V2	**CALIBR. PARAMETERS**	Conductivity of solution	α value of solution		Temperature of solution						Autom. HOLD during calibration
V3											
V4											
V5	**CONC. TABLE**	Substance selection	Edit table	Number of elements	Selection of elements	Conc. value	Temperature value	Conductivity value	Status		
V6	**ALPHA TABLE**	Number of elements	Selection of elements	Temperature value	Alpha value	Status					
V7											
V8	**DIAGNOSIS**	Selection of error code	Error Status	Error assignment	Error current delay						Unlock/Lock
V9	**SERVICE/ SIMULATION**	Error code			Software version	Hardware version	Factory defaults			Current output simulation	Current value
VA	**USER INFO**	Meas. point (tag number)									

6.2 PROFIBUS-PA

Please refer to separate operating instructions for instruments equipped with the PROFIBUS interface.

7 Troubleshooting

7.1 Error indication

The MyPro CLM 431 / CLD 431 indicates errors by means of an alarm symbol flashing on the display. It also outputs an error current of 22 +/- 0.5 mA at the current output if configured accordingly (VH 80 – 83).

The error can then be identified in the diagnostic parameters via the diagnostic code. Up to five entries are listed according to priority.

7.2 Diagnostic codes (error codes)

The following table describes the diagnostic/error codes of this instrument variant.

The default error current assignment (active or not active) for each code is also listed.

Failure no.	Display	Measures	Error current assignment (default)
E1	EEPROM memory error	Switch instrument off and on again, return instrument to your local Endress+Hauser sales agency or exchange instrument.	active
E2	Instrument not adjusted, adjustment data invalid, no user data available or user data invalid (EEPROM error)		active
E7	Transmitter malfunction		active
E8	Measuring cell or measuring cell connection faulty	Check measuring cell and measuring cell connection (E+H Service).	active
E10	No temperature sensor connected or temperature sensor short-circuited (temperature sensor faulty)	Check temperature sensor and connections; if necessary, check instrument with temperature simulator.	active
E25	Limit for Airset offset exceeded	Repeat Airset (in air) or replace measuring cell.	active
E36	Measuring cell calibration range exceeded	Clean measuring cell and recalibrate; if necessary, check measuring cell and connections.	active
E37	Below measuring cell calibration range		active
E45	Calibration aborted	Repeat calibration.	active
E46	Current output parameter limits interchanged	Set value for 20 mA to a value > value for 4 mA.	active
E49	Installation factor calibration range exceeded	Check pipe diameter, clean measuring cell and repeat calibration.	active
E50	Below installation factor calibration range	Check pipe diameter, clean measuring cell and repeat calibration.	active
E55	Below main parameter measuring range	Immerse sensor in conductive medium or perform Airset.	active
E57	Main parameter measuring range exceeded	Check measurement, control and connections.	active
E59	Below temperature measuring range		active
E61	Temperature measuring range exceeded		active

Failure no.	Display	Measures	Error current assignment (default)
E63	Below current output range	Check configuration.	not active
E64	Current output range exceeded	Check measured value and current assignment.	not active
E77	Temperature outside α value table range	Clean measuring cell; check tables.	not active
E78	Temperature outside concentration table		not active
E79	Conductivity outside concentration table		not active
E80	Current output parameter range too small	Spread current output.	not active
E100	Current simulation active	Switch off current simulation.	not active
E101	Service function active	Switch off service function or switch instrument off and on again.	not active
E106	Download active	Wait for download to be finished.	not active
E116	Download error	Repeat download.	active
E150	Distance between temperature values in α value table too small or not monotonously increasing	Enter correct values in α value table (minimum distance between temperature values of 10 K required).	not active

8 Service and maintenance

8.1 Cleaning

We recommend using commercially available cleaning agents to clean the front of the instrument.

The instrument front is resistant to (DIN 42 115 test method):

- alcohol (short-term)
- diluted acids (max. 2 % HCl)
- diluted lyes (max. 3 % NaOH)
- soap-based household detergents

Note:

Do not use concentrated mineral acids or lyes, benzyl alcohol, methylene chloride or high-pressure steam to clean the front panel.

8.2 Repairs

Repairs may only be carried out by the manufacturer or through the Endress+Hauser service organization. An overview of the Endress+Hauser service network can be found on the back cover of these operating instructions.

9 Accessories

The following accessories may be ordered separately:

- **Transmitter power supply units**
  - RN 221 power separator (non-Ex)
  - RN 221 Z power separator (Ex)
  - NX 9120 power supply (1 channel, non-Ex)
  - NX 9121 power supply unit (3 channels, Ex)
  - 1-channel transmitter power supply units with galvanically separated power output

Output voltage: typ. 24 V DC ±1 V
Output current: max. 33 mA
Current limiting: 38 mA ±5 mA

- **Hand-held HART® terminal DXR 275**

The hand-held terminal communicates with any HART-compatible unit via the 4 ... 20 mA line.

Refer to the E+H sales agency in your area for details and further information on programming (see back cover of these operating instructions for addresses).

- **Commuwin II with Commubox**

Commuwin II is a graphical, PC based operating program for intelligent measuring instruments.

Refer to the E+H-System Information SI 018F/00/en for further information on Commuwin II. A gratis update of the commuwin device description is available via internet http://www.endress.com.

The Commubox serves as the required interface between the HART® interface and the serial PC interface.

Refer to the E+H sales agency in your area for further information (see back cover of these operating instructions for addresses).

- **Extension cable CLK 5**
  Extension cable for inductive measuring cells for use with junction box VBM.
  Order no. 50085473

- **Junction box VBM**
  Junction box for extension of the measuring cable connection between the measuring cell and the instrument.
  Protection type: IP 65
  Order no. 50003987

- **Junction box VBM-Ex**
  Junction box for extension of the measuring cable connection between the measuring cell and the instrument in Ex zone 1.
  Protection type: IP 65
  Order no. 50003991

- **Calibration solutions**
  Precision solutions, max. error 0.5%, reference temperature 25 °C. Package quantity: 500 ml. See Technical Information for CLY 11.
  Order no. for TI: 50086573

10 Technical data

MyPro CLM 431 inductive

General specifications

Manufacturer	Endress+Hauser
Equipment designation	MyPro CLM 431 inductive

Physical data

Dimensions (H × W × D)	227 × 104 × 137 mm
Weight	max. 1.25 kg
Protection type	IP 65
Housing material	GD-AlSi 10 Mg, plastic-coated
Measured value display	liquid crystal display

Conductivity measurement

Measuring range	0 ... 2000 mS/cm (uncompensated)
Measurement deviation[1]	±0.5 % of meas. value ± 4 digits
Reproducibility[1]	±0.2 % of meas. value ± 4 digits
Usable cell constants	k = 0.0025 ... 99.99 cm^{-1}
Max. measuring cable length	55 m (CLK 5)
Max. resolution (in most sensitive measuring range)	0.1 µS/cm
Measuring frequency	2 kHz

Temperature measurement

Suitable temperature sensor	Pt 100
Measuring range of Pt 100	–35 ... +250 °C
Measurement deviation[1]	range: 0 ... 100 °C: ±0.5 K entire measuring range: ±1 K
Measured value resolution	0.1 °C
Reproducibility[1]	±0.1 K
Adjustable temperature offset	±20 K

Temperature compensation

Compensation types	no (α=0), linear, NaCl, table
Range	–35 ... +250 °C
Reference temperature	adjustable; factory setting 25 °C

Signal output

Current range	4 ... 20 mA
Measurement deviation[1]	± 22 µA ± 0,5 µA · I_{real} / mA · ΔT / K $\Delta T = T_a - 25$ °C for $T_a \geq 25$ °C $\Delta T = 25$ °C $- T_a$ for $T_a < 25$ °C
Load	max. 820 Ω
Resolution	< 6 µA
Minimum distance (for 4 ... 20 mA signal): Meas. value between 0 ... 199.9 µS/cm Meas. value between 200 ... 1999 µS/cm Meas. value between 2 ... 19.99 mS/cm Meas. value > 20 mS/cm	 20 µS/cm 200 µS/cm 2 mS/cm 20 mS/cm

Electrical data

Supply voltage	12 ... 30 V DC
Power consumption	max. 660 mW
Signal output	4 ... 20 mA, potential separated from meas. cell circuit
Error current signal output	22 mA ± 0.02 mA
HART® transfer: load	250 ... 820 Ω
HART® transfer: signal output	0.8 ... 1.2 mA (peak to peak)
Terminals, max. cable cross section	2.5 mm^2, screen 4 mm^2

[1] acc. to IEC 60746-1, for nominal operating conditions

Ex version of instrument

CLM 431-H

Intrinsically safe power supply and signal circuit, protection type EEx ib IIC T4	
Max. input voltage U_i	30 V DC
Max. input current I_i	100 mA
Max. input power P_i	750 mW
Max. internal inductance L_i	200 µH
Max. internal capacitance C_i	≈ 0, to PE = 5.3 nF

Intrinsically safe sensor circuit, protection type EEx ia IIC T4	
Max. output voltage U_o	±6.3 (12.6) V DC
Max. output current I_o	130 mA
Max. output power P_o	211 mW
Max. external inductance L_o	100 µH
Max. external capacitance C_o	100 nF

Ambient conditions

Electromagnetic compatibility (EMC)	Interference emission and interference immunity acc. to EN 61326-1:1998
Ambient temperature T_a (nominal operating conditions)	–15 ... +55 °C
Relative humidity (nominal operating conditions)	10 ... 95 %, non-condensing
Ambient temperature T_a (limit operating conditions)	–20 ... +60 °C (Ex: –20 ... +55 °C)
Storage and transport temperature	–20 ... +70 °C

Supplementary documentation

TI CLS 50	order no. 50090385

MyPro CLD 431 inductive

General specifications

Manufacturer	Endress+Hauser
Equipment designation	MyPro CLD 431 inductive

Physical data

Length with CLS 50	350 ... 360 mm (depending on flange)
Process connection	fixed flange DN 50 / PN 16; ANSI 2 " / 300 lbs; JIS 10K / 50A lap joint flange DN 50 / PN 10; ANSI 2 " / 150 lbs; JIS 10K / 50A
Weight	approx. 4.5 kg
Protection type	IP 65
Housing material	GD-AlSi 10 Mg, plastic-coated
Materials in contact with medium	PFA/PTFE or PEEK/PTFE
Measured value display	liquid crystal display

Conductivity measurement

Measuring cell	CLS 50
Measuring range	0 ... 2000 mS/cm
Cell constant	k = 2 cm^{-1}

Operating data

max. operating pressure	see pressure/temperature diagram
max. operating temperature	85 °C for Ex version 125 °C with PFA flange 180 °C with PEEK flange

Other data

Same as CLM 431 inductive

Ex version of instrument

CLD431-H

Intrinsically safe power supply and signal circuit, protection type EEx ia/ib IIC T4	
Max. input voltage U_i	30 V DC
Max. input current I_i	100 mA
Max. input power P_i	750 mW
Max. internal inductance L_i	200 µH
Max. internal capacitance C_i	≈ 0, to PE = 5.3 nF

Supplementary documentation

TI CLS 50	order no. 50090385

Subject to modifications.

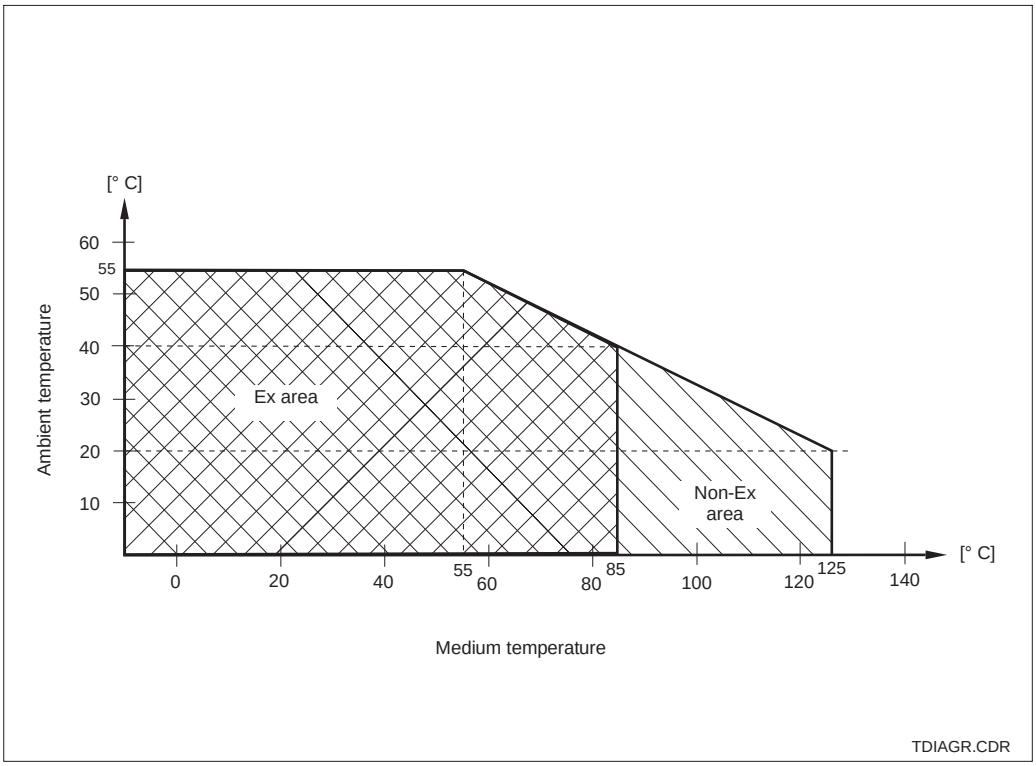

Fig. 10.1 Permissible temperature ranges of MyPro CLD 431

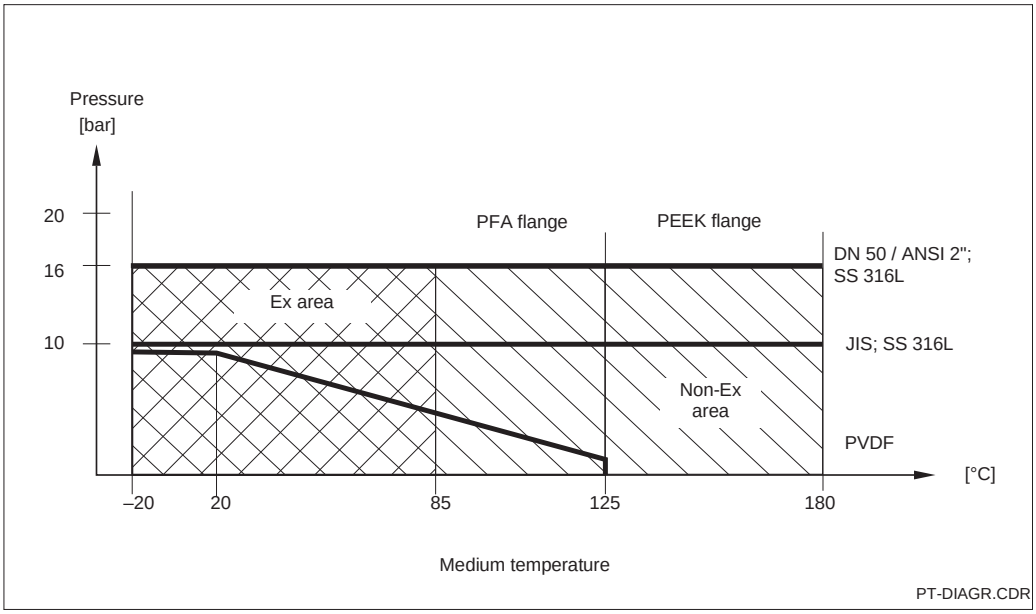

Fig. 10.2 Pressure/temperature diagram dependent on the sensor material and the flange version

11 Index

Europe

Austria
❑ Endress+Hauser Ges.m.b.H.
Wien
Tel. ++43 (1) 880 56-0, Fax (1) 880 56-35

Belarus
Belorgsintez
Minsk
Tel. ++375 (172) 26 31 66, Fax (172) 26 31 11

Belgium / Luxembourg
❑ Endress+Hauser S.A./N.V.
Brussels
Tel. ++32 (2) 248 06 00, Fax (2) 248 05 53

Bulgaria
INTERTECH-AUTOMATION
Sofia
Tel. ++359 (2) 66 48 69, Fax (2) 963 13 89

Croatia
❑ Endress+Hauser GmbH+Co.
Zagreb
Tel. ++385 (1) 663 77 85, Fax (1) 663 78 23

Cyprus
I+G Electrical Services Co. Ltd.
Nicosia
Tel. ++357 (2) 48 47 88, Fax (2) 48 46 90

Czech Republic
❑ Endress+Hauser GmbH+Co.
Praha
Tel. ++420 (26) 678 42 00, Fax (26) 678 41 79

Denmark
❑ Endress+Hauser A/S
Søborg
Tel. ++45 (70) 13 11 32, Fax (70) 13 21 33

Estonia
Elvi-Aqua
Tartu
Tel. ++372 (7) 42 27 26, Fax (7) 42 27 27

Finland
❑ Endress+Hauser Oy
Espoo
Tel. ++358 (9) 859 61 55, Fax (9) 859 60 55

France
❑ Endress+Hauser
Huningue
Tel. ++33 (3) 89 69 67 68, Fax (3) 89 69 48 02

Germany
❑ Endress+Hauser Meßtechnik GmbH+Co.
Weil am Rhein
Tel. ++49 (7621) 975 01, Fax (7621) 975 55 55

Great Britain
❑ Endress+Hauser Ltd.
Manchester
Tel. ++44 (161) 286 50 00,
Fax (161) 998 18 41

Greece
I & G Building Services Automation S.A.
Athens
Tel. ++30 (1) 924 15 00, Fax (1) 922 17 14

Hungary
Mile Ipari-Elektro
Budapest
Tel. ++36 (1) 261 55 35, Fax (1) 261 55 35

Iceland
Vatnshreinsun HF
Reykjavik
Tel. ++354 (5) 619 616, Fax (5) 619 617

Ireland
Flomeaco Company Ltd.
Kildare
Tel. ++353 (45) 868 615, Fax (45) 868 182

Italy
❑ Endress+Hauser Italia S.p.A.
Cernusco s/N Milano
Tel. ++39 (02) 921 064 21,
Fax (02) 921 071 53

Latvia
Raita Ltd.
Riga
Tel. ++371 (7) 312 897, Fax (7) 312 894

Lithuania
Agava Ltd.
Kaunas
Tel. ++370 (7) 202 410, Fax (7) 207 414

Netherlands
❑ Endress+Hauser B.V.
Naarden
Tel. ++31 (35) 695 86 11, Fax (35) 695 88 25

Norway
❑ Endress+Hauser A/S
Tranby
Tel. ++47 (32) 859 850, Fax (32) 859 851

Poland
❑ Endress+Hauser Polska Sp. z o.o.
Warszawy
Tel. ++48 (22) 720 10 90, Fax (22) 720 10 85

Portugal
Tecnisis - Tecnica de Sistemas Industriais
Linda-a-Velha
Tel. ++351 (1) 417 26 37, Fax (1) 418 52 78

Romania
Romconseng SRL
Bucharest
Tel. ++40 (1) 410 16 34, Fax (1) 410 16 34

Russia
❑ Endress+Hauser Moscow Office
Moscow
Tel.++709 (5) 158 75 71, Fax (5) 158 98 64

Slovak Republic
Transcom Technik s.r.o.
Bratislava
Tel. ++421 (74) 488 86 84, Fax (74) 488 71 12

Slovenia
❑ Endress+Hauser D.O.O.
Ljubljana
Tel. ++386 (61) 159 22 17, Fax (61) 159 22 98

Spain
❑ Endress+Hauser S.A.
Barcelona
Tel. ++34 (93) 480 33 66, Fax (93) 473 38 39

Sweden
❑ Endress+Hauser AB
Sollentuna
Tel. ++46 (8) 555 116 00, Fax (8) 555 116 00

Switzerland
❑ Endress+Hauser AG
Reinach/BL 1
Tel. ++41 (61) 715 75 75, Fax (61) 711 16 50

Turkey
Intek Endüstriyel Ölcü ve Kontrol Sistemleri
Istanbul
Tel. ++90 (212) 275 13 55,
Fax (212) 266 27 75

Ukraine
Industria Ukraïna
Kiev
Tel. ++380 (44) 268 81, Fax (44) 269 08

Yugoslavia
Meris d.o.o.
Beograd
Tel. ++381 (11) 444 61 64, Fax (11) 444 19 66

Africa

Egypt
Anasia
Heliopolis/Cairo
Tel. ++20 (2) 417 900, Fax (2) 417 900

Morocco
Oussama S.A.
Casablanca
Tel. ++212 (2) 241 338, Fax (2) 402 657

Nigeria
J F Technical Invest. Nig. Ltd.
Lagos
Tel. ++234 (1) 622 345 46, Fax (1) 622 345 48

South Africa
❑ Endress+Hauser Pty. Ltd.
Sandton
Tel. ++27 (11) 444 13 86, Fax (11) 444 19 77

Tunisia
Controle, Maintenance et Regulation
Tunis
Tel. ++216 (1) 793 077, Fax (1) 788 595

America

Argentina
❑ Endress+Hauser Argentina S.A.
Buenos Aires
Tel. ++54 (1) 145 22 79 70,
Fax (1) 145 22 79 09

Bolivia
Tritec S.R.L.
Cochabamba
Tel. ++591 (42) 569 93, Fax (42) 509 81

Brazil
❑ Samson Endress+Hauser Ltda.
Sao Paulo
Tel. ++55 (11) 503 134 55,
Fax (11) 503 130 67

Canada
❑ Endress+Hauser Ltd.
Burlington, Ontario
Tel. ++1 (905) 681 92 92,
Fax (905) 681 94 44

Chile
DIN Instrumentos Ltda.
Santiago
Tel. ++56 (2) 205 01 00, Fax (2) 225 81 39

Colombia
Colsein Ltd.
Bogota D.C.
Tel. ++57 (1) 236 76 59, Fax (1) 610 78 68

Costa Rica
EURO-TEC S.A.
San Jose
Tel. ++506 (2) 96 15 42, Fax (2) 96 15 42

Ecuador
Insetec Cia. Ltda.
Quito
Tel. ++593 (2) 269 148, Fax (02) 461 833

Guatemala
ACISA Automatizacion Y Control Industrial S.A.
Ciudad de Guatemala, C.A.
Tel. ++502 (3) 345 985, Fax (2) 327 431

Mexico
❑ Endress+Hauser I.I.
Mexico City
Tel. ++52 (5) 568 965, Fax (5) 568 418

Paraguay
Incoel S.R.L.
Asuncion
Tel. ++595 (21) 213 989, Fax (21) 226 583

Uruguay
Circular S.A.
Montevideo
Tel. ++598 (2) 925 785, Fax (2) 929 151

USA
❑ Endress+Hauser Inc.
Greenwood, Indiana
Tel. ++1 (317) 535 71 38,
Fax (317) 535 84 89

Venezuela
H. Z. Instrumentos C.A.
Caracas
Tel. ++58 (2) 944 09 66, Fax (2) 944 45 54

Asia

China
❑ Endress+Hauser Shanghai
Instrumentation Co. Ltd.
Shanghai
Tel. ++86 (21) 54 90 23 00,
Fax (21) 54 90 23 03

❑ Endress+Hauser Beijing Office
Beijing
Tel. ++86 (10) 68 34 40 58,
Fax (10) 68 34 40 68

❑ Endress+Hauser (H.K.) Ltd.
Hong Kong
Tel. ++852 (2) 528 31 20, Fax (2) 865 41 71

India
❑ Endress+Hauser India Branch Office
Mumbai
Tel. ++91 (22) 852 14 58, Fax (22) 852 19 27

Indonesia
PT Grama Bazita
Jakarta
Tel. ++62 (21) 797 50 83, Fax (21) 797 50 89

Japan
❑ Sakura Endress Co., Ltd.
Tokyo
Tel. ++81 (422) 54 06 11, Fax (422) 55 02 75

Malaysia
❑ Endress+Hauser (M) Sdn. Bhd.
Petaling Jaya, Selangor Darul Ehsan
Tel. ++60 (3) 733 48 48, Fax (3) 733 88 00

Pakistan
Speedy Automation
Karachi
Tel. ++92 (21) 772 29 53, Fax (21) 773 68 84

Papua New Guinea
SBS Electrical Pty Limited
Port Moresby
Tel. ++675 (3) 251 188, Fax (3) 259 556

Philippines
Brenton Industries Inc.
Makati Metro Manila
Tel. ++63 (2) 638 80 41, Fax (2) 638 80 42

Singapore
❑ Endress+Hauser (S.E.A.) Pte., Ltd.
Singapore
Tel.++65 (5) 668 222, Fax (2) 666 848

South Korea
❑ Endress+Hauser (Korea) Co., Ltd.
Seoul
Tel. ++82 (2) 658 720 0, Fax (2) 659 283 8

Taiwan
Kingjarl Corporation
Taipei R.O.C.
Tel. ++886 (2) 27 183 938, Fax (2) 27 134 190

Thailand
❑ Endress+Hauser Ltd.
Bangkok
Tel. 66 (2) 996 781 120, Fax (2) 996 781 0

Vietnam
Tan Viet Bao Co. Ltd.
Ho Chi Minh City
Tel. ++84 (8) 833 52 25, Fax (8) 833 52 27

Iran
Telephone Technical Services Co. Ltd.
Tehran
Tel. ++98 (21) 874 67 50, Fax (21) 873 72 95

Israel
Instrumetrics Industrial Control Ltd.
Tel-Aviv
Tel. ++972 (3) 648 02 05, Fax (3) 647 19 92

Jordan
A.P. Parpas Engineering S.A.
Amman
Tel. ++962 (6) 464 32 46, Fax (6) 464 57 07

Kingdom of Saudi Arabia
Anasia
Jeddah
Tel. ++966 (2) 671 00 14, Fax (2) 672 59 29

Kuwait
Kuwait Maritime & Mercantile Co. K.S.C.
Safat
Tel.++965 (2) 44 14 81, Fax (2) 44 14 86

Lebanon
Nabil Ibrahim
Jbeil
Tel. ++961 (3) 254 052, Fax (9) 548 038

Sultanate of Oman
Mustafa & Jawad Science & Industry Co.
L.L.C.
Ruwi
Tel. ++968 (60) 20 09, Fax (60) 70 66

United Arab Emirates
Descon Trading EST.
Dubai
Tel. ++971 (4) 653 651, Fax (4) 653 264

Yemen
Yemen Company for Ghee and Soap Industry
Taiz
Tel. ++976 (4) 230 664, Fax (4) 212 338

Australia + New Zealand

Australia
ALSTOM Australia Ltd.
Sydney
Tel. ++61 (2) 972 247 77, Fax (2) 972 248 88

New Zealand
EMC Industrial Instrumentation
Auckland
Tel. ++64 (9) 415 51 10, Fax (9) 415 51 15

All other countries

❑ Endress+Hauser GmbH+Co.
Instruments International
D-Weil am Rhein
Germany
Tel. ++49 (7621) 975 02, Fax (7621) 975 345

❑ Members of the Endress+Hauser group

Endress+Hauser
The Power of Know How

BA 365C/07/en/02.00
Printed in Germany / CV5 / Lf

51512805