BA 172C/07/en/01.03
50088307
Valid of:
Sofware version 2.20

MyPro CLM 431 / CLD 431 PROFIBUS-PA

Two-wire transmitter for the conductive conductivity and resistance measurement with field communication

Operating Instructions

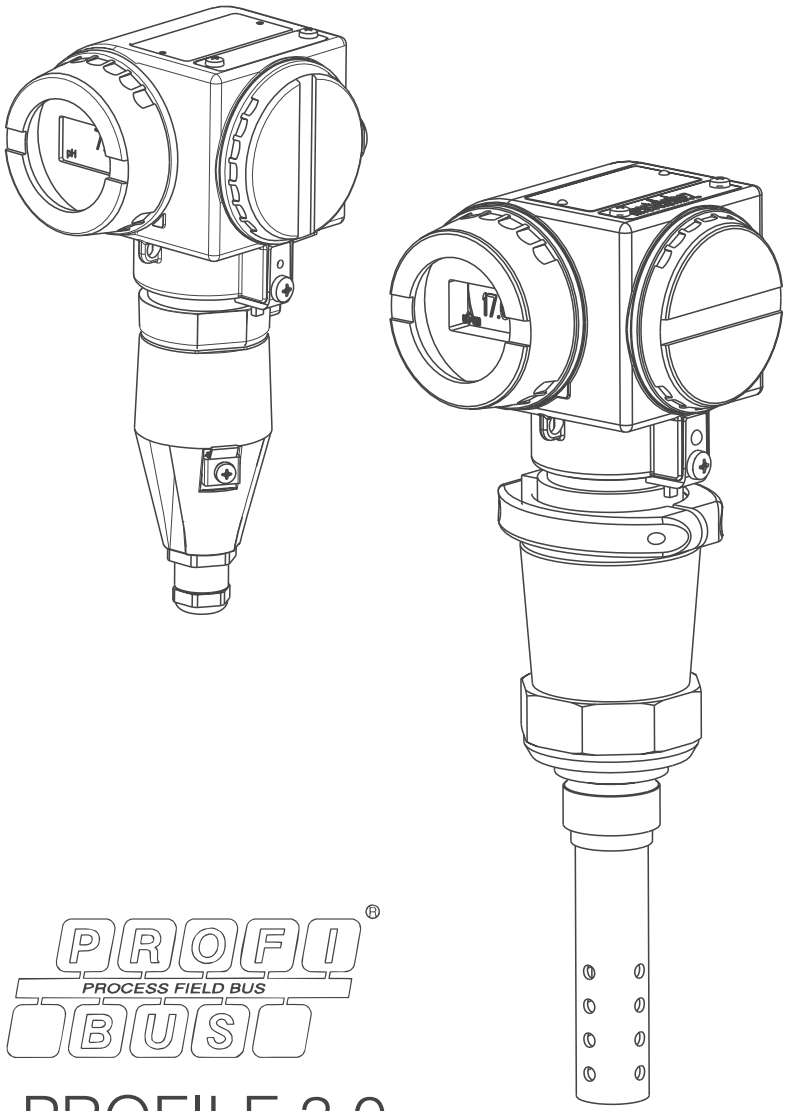

PROFI BUS PROCESS FIELD BUS

PROFILE 3.0

Endress+Hauser
The Power of Know How

Table of contents

1 Safety instructions

1.1 Designated use

MyPro CLM 431 is a two-wire transmitter for the conductive conductivity measurement in Ex- and Non-Ex areas.
In particular, CLM 431 and the compact version CLD 431 are designated for the conductivity and specific resistance determination of liquids in all branches of engineering and process technology.

The PROFIBUS interface realises the transmitter operation via PC resp. via a PLC. Commuwin II is the PC user software.

Any other use than the one described here compromises the safety of persons and the entire measuring system and is, therefore, not permitted.
The manufacturer is not liable for damage caused by improper or non-designated use.

1.2 Installation, commissioning and operation

Please note the following items:
- Installation, electrical connection, commissioning, operation and maintenance of the measuring system must only be carried out by trained technical personnel.
  The technical personnel must be authorised for the specified activities by the system operator.
- Technical personnel must have read and understood these Operating Instructions and must adhere to them.
- Before commissioning the entire measuring point, check all the connections for correctness. Ensure that electrical cables and hose connections are not damaged.
- Do not operate damaged products and secure them against unintentional commissioning. Mark the damaged product as being defective.
- Measuring point faults may only be rectified by authorised and specially trained personnel.
- If faults can not be rectified, the products must be taken out of service and secured against unintentional commissioning.
- Repairs not described in these Operating Instructions may only be carried out at the manufacturer's or by the Endress+Hauser service organisation.

1.3 Operational safety

The transmitter has been designed and tested according to the state of the art and left the factory in perfect functioning order.
Relevant regulations and European standards have been met.

As the user, you are responsible for complying with the following safety conditions:
- Installation instructions
- Installation instructions
- Local prevailing standards and regulations.

In addition, the separate Ex documentation also applies to Ex systems. This is part of these Operating Instructions (see also chapter "Scope of delivery").

1.4 Return

If the transmitter has to be repaired, please return it *cleaned* to the Endress+Hauser sales centre responsible.
Please use the original packaging, if possible.

Please enclose the completed Dangerous Goods sheet (copy the second last page of these Operating instructions) with the packaging and also the shipping documents.

1.5 Notes on safety icons and symbols

Warning!
This symbol alerts you to hazards. They can cause serious damage to the instrument or to persons if ignored.

Caution!
This symbol alerts you to possible faults which could arise from incorrect operation. They could cause damage to the instrument if ignored.

Note!
This symbol indicates important items of information.

2 Identification

2.1 Device designation

2.1.1 Nameplate

Please, check the order code on the nameplate (at the MyPro) with the product structure (see below) and with your order.

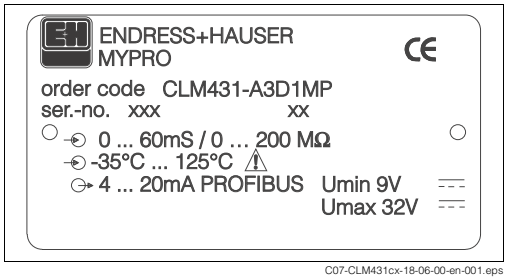

Fig. 1: CLM 431 Nameplate (example)

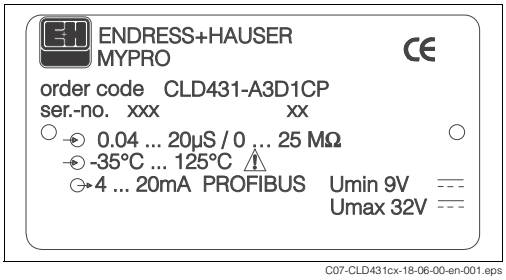

Fig. 2: CLD 431 Nameplate (example)

2.1.2 Product structure

MyPro CLM 431 (conductive, transmitter without sensor)

	Type of Certificate						
	A	Non-Ex version					
	H	EEx ia/ib IIC T4, ATEX II (1) 2G					
	O	FM IS NI C1.I, II, III, Div. 1&2, Group A-G					
	S	CSA IS NI C1.I, II, III, Div. 1&2, Group A-G					
	T	TIIS EEx ia/ib II C T4					
		Cable entry for power supply					
		1	Cable thread Pg 13.5				
		3	Cable entry M 20 x 1.5				
		5	Cable entry NPT ½"				
		7	Cable entry G½				
		8	PROFIBUS-PA-M12 plug				
			Electronics, communication, display				
			A	4 ... 20 mA, Hart®, without display			
			B	4 ... 20 mA, Hart®, LCD			
			D	PROFIBUS-PA, LCD			
				Accessories			
				1	No accessories		
				2	For wall and pipe installation DN 60		
				3	For wall and pipe installation DN 30 ... DN 200		
				4	With flange mounting brackets		
					Parameter configuration		
					C	Conductive conductivity measurement	
					M	Conductive, specific resistance measurement	
						Cable, Sensor connection	
						A	Without cable
						C	With 1 m CYK 71 cable
						E	With 2 m CYK 71 cable
CLM 431-							complete order code

Note!
With a MyPro for conductive conductivity with HART® communication (see "Electronics, Communication, Display") you will get the Operating Instructions BA202/C07/en.

MyPro CLD 431 (conductive, compact version)

	Type of Certificate					
	A	Non-Ex version				
	H	EEx ia/ib IIC T4, ATEX II (1) 2G				
	O	FM IS NI C1.I, II, III, Div. 1&2, Group A-G				
	S	CSA IS NI C1.I, II, III, Div. 1&2, Group A-G				
	T	TIIS EEx ia/ib II C T4				
		Cable entry for power supply				
		1	Cable thread Pg 13.5			
		3	Cable entry M 20 x 1.5			
		5	Cable entry NPT ½"			
		7	Cable entry G½			
		8	PROFIBUS-PA-M12 plug			
			Electronics, communication, display			
			A	4 ... 20 mA, Hart®, without display		
			B	4 ... 20 mA, Hart®, LCD		
			D	PROFIBUS-PA, LCD		
				Accessories		
				1	No accessories	
					Sensor, process connection, materials	
					CA	CLS 12, k=0.01 cm^{-1}, 0.04 ... 20 µS/cm, G1, SS 1.4571 (AISI 316Ti)
					CB	CLS 12, k=0.1 cm^{-1}, 0.1 ... 200 µS/cm, G1, SS 1.4571 (AISI 316Ti)
					CB	CLS 12, k=0.01 cm^{-1}, 0.04 ... 20 µS/cm, NPT 1", SS 1.4571 (AISI 316Ti)
					CB	CLS 12, k=0.1 cm^{-1}, 0.1 ... 200 µS/cm, NPT 1", SS 1.4571 (AISI 316Ti)
CLD 431-						complete order code

Note!
With a MyPro for conductive conductivity with HART® communication (see "Electronics, Communication, Display") you will get the Operating Instructions BA202/C07/en.

2.2 Scope of delivery

2.2.1 CLM 431 (conductive, transmitter without sensor)

The scope of delivery complies:
- A transmitter MyPro CLM 431
- A set of installation accessories acc. to ordered version
- A manufacturers certificate acc. to ordered version (type of certificate)
- An Operating Instructions BA 172C/07/en
- An additional documentation for Ex instruments XA 173C/07/a3 (with Ex versions only)

2.2.2 CLD 431 (conductive, compact version)

The scope of delivery complies:
- A compact version MyPro CLD 431
- A manufacturers certificate acc. to ordered version (type of certificate)
- An Operating Instructions BA 172C/07/en
- An additional documentation for Ex instruments XA 173C/07/a3 (with Ex versions only)

2.3 Certificates and approvals

2.3.1 CE approval

Declaration of conformity
The product meets the legal requirements of the harmonised European standards. Endress+Hauser confirms compliance with the standards by affixing the CE symbol.

2.3.2 Ex approvals

Acc. to the ordered version:
- ATEX II (1)2G, EEx ia/ib IIC T4
- CSA IS NI Cl.I, II, III, Div. 1&2, Group A-G
- FM IS NI Cl.I, II, III, Div. 1&2, Group A-G
- EEx ia/ib IIC T4, ATEX II (1)2G

3 Installation

3.1 System setup

The complete system consists of the following components:
- Transmitter MyPro PROFIBUS-PA
- Segment coupler
- Programmable logic controller (PLC) bzw. PC with Commuwin II software
- PROFIBUS-PA terminating resistor
- Wiring including bus distributor

Note!
The maximum number of transmitters on one bus segment is determined by their current consumption, the power of the bus coupler and the required bus length.

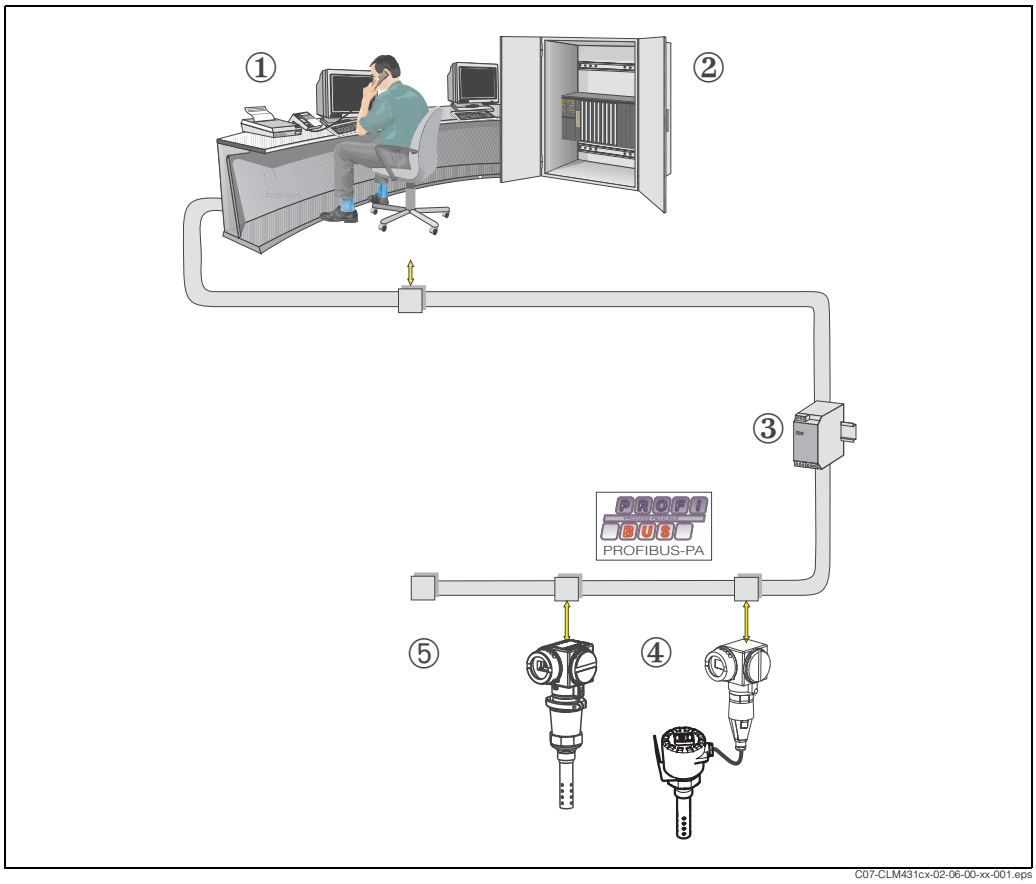

Fig. 3: Measuring systems with PROFIBUS interface

1 PC with Commuwin II software
2 PLC
3 Segment coupler
4 MyPro CLM 431- resp. CLD 431-PROFIBUS-PA
5 Terminating resistor

3.2 Incoming acceptance, transport, storage

- Make sure the packaging is undamaged!
  Inform the supplier about damage to the packaging.
  Keep the damaged packaging until the matter has been settled.
- Make sure the contents are undamaged!
  Inform the supplier about damage to the delivery contents.
  Keep the damaged products until the matter has been settled.
- Check that the scope of delivery is complete and agrees with your order and the shipping documents.
- The packaging material used to store or to transport the product must provide shock protection and humidity protection. The original packaging offers the best protection. Also, keep to the approved ambient conditions (see "Technical data").
- If you have any questions, please contact your supplier or your Endress+Hauser sales centre responsible (see back page of these Operating Instructions).

3.3 Installation conditions

3.3.1 CLM 431 (version without sensor)

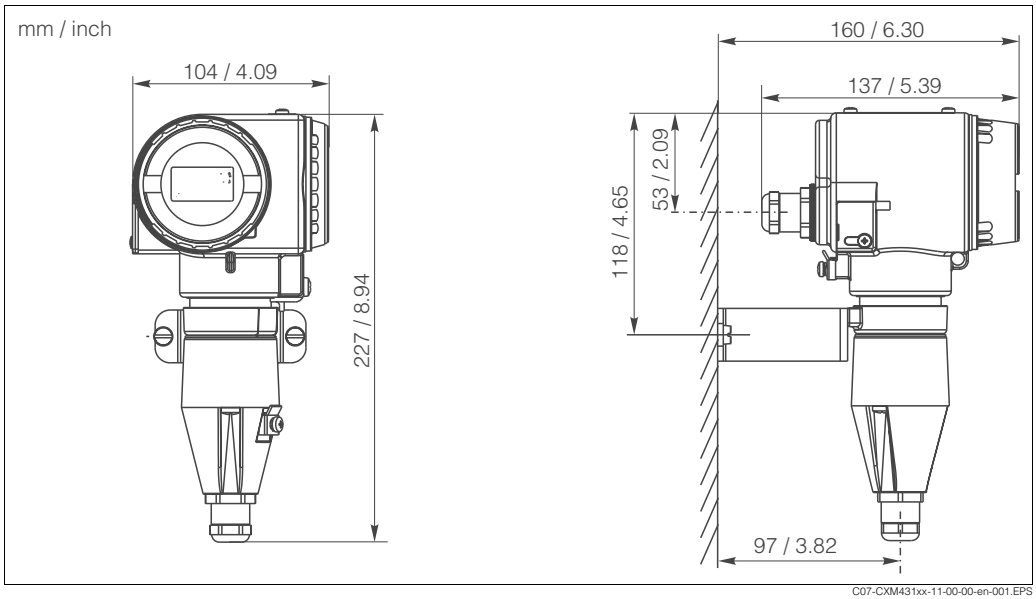

Fig. 4: MyPro for wall mounting (with CXM431-xxx2xx in scope of delivery)

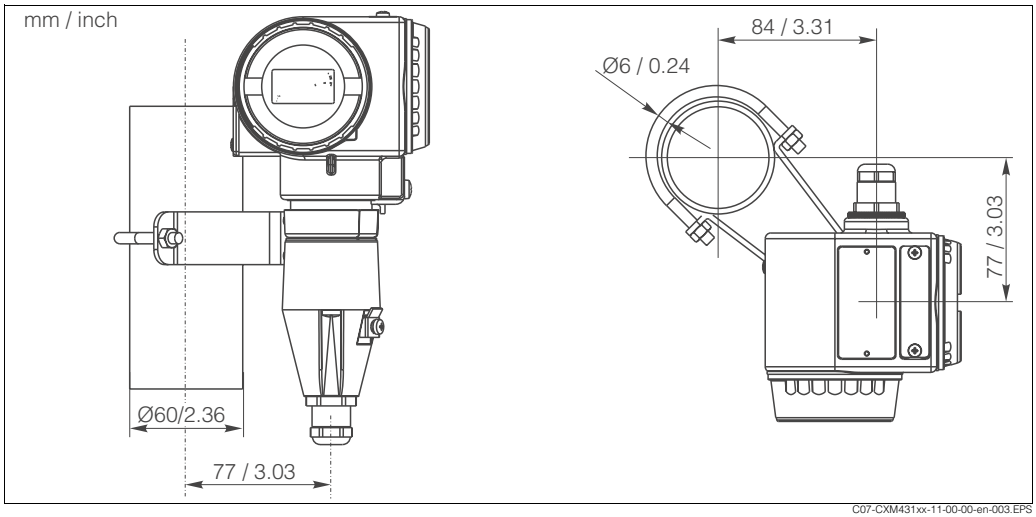

Fig. 5: MyPro for pipe mounting DN 60 (2.36 inch) (with CXM431-xxx2xx in scope of delivery)

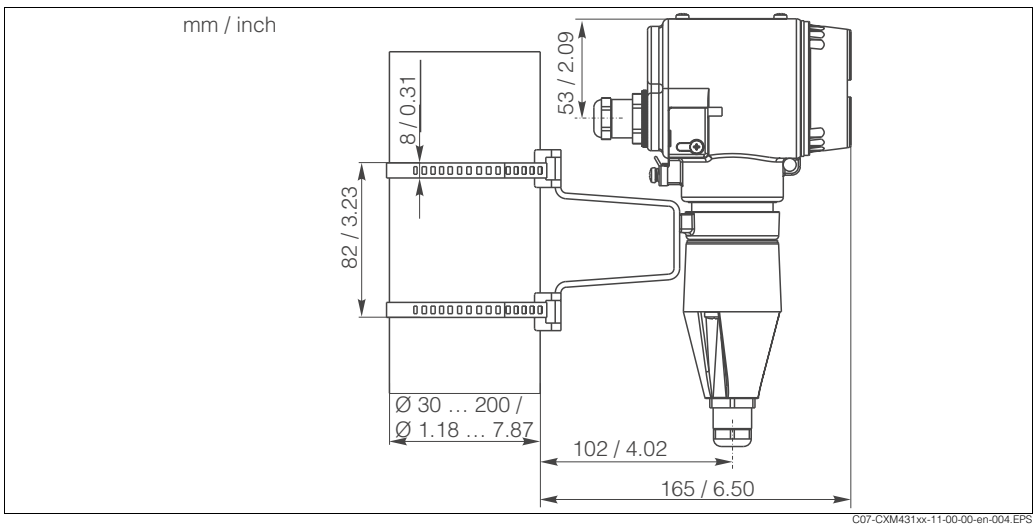

Fig. 6: MyPro for pipe mounting DN 30 ... 200 mm (1.18 to 7.87 inch) (with CXM431-xxx3xx in scope of delivery)

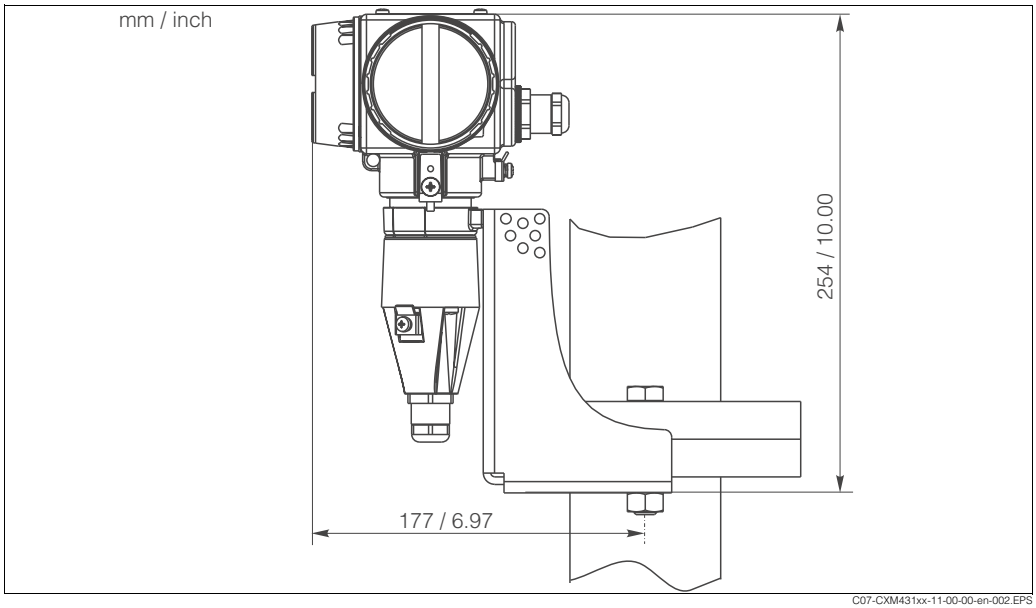

Fig. 7: MyPro: Flange installation with mounting bracket (with CXM431-xxx4xx in scope of delivery)

3.3.2 CLD 431 (compact version)

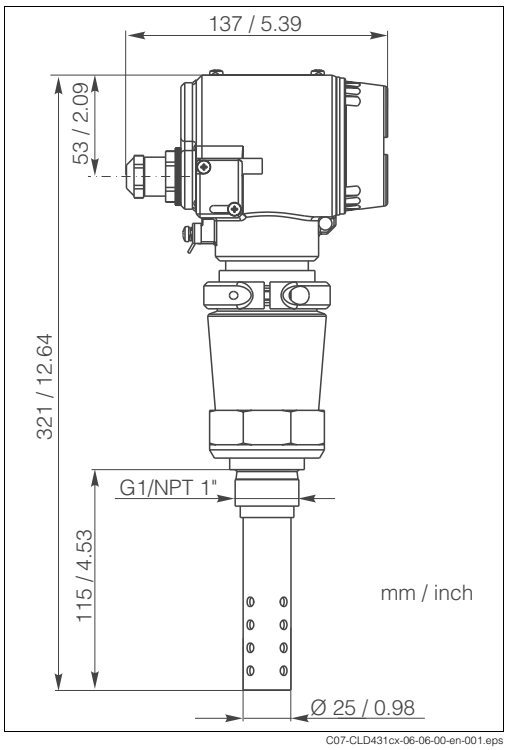

Fig. 8: CLD 431 dimensions

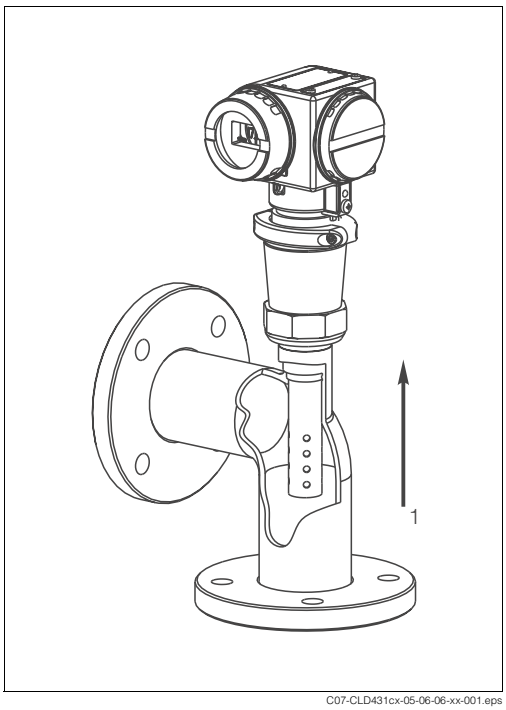

Fig. 9: CLD 431 pipe mounting

1 Medium flow direction

Note!

- If possible, install the compact version in a way that the medium flow direction to the sensor is upwards (Fig. 9). A lateral flow against the sensor is possible, too. In this case, make sure that the electrodes of the sensor are completely immersed in the medium.
- The distance of the sensor from the inside pipe wall does not influence the accuracy of the measurement.
- Do not exceed a torque of 25 Nm when fastening the thread.

3.4 Installation instructions

3.4.1 CLM 431

Mount the transmitter on a wall or a pipe using the supplied mounting set (depending on the version ordered).

1. Screw the transmitter to the support with 2 screws.
   Depending on the installation situation, the support can be attached to the transmitter horizontally or vertically because there are 4 holes on the support.
2. Secure the support with MyPro on the wall or pipe using screws (wall) or clips (pipe).
3. If necessary, align the housing of the transmitter such that you have complete access to the operating keys and a clear view of the display.
   To do this, loosen the adjusting screw (Fig. 10), turn the housing into the desired position and tighten the screw again.

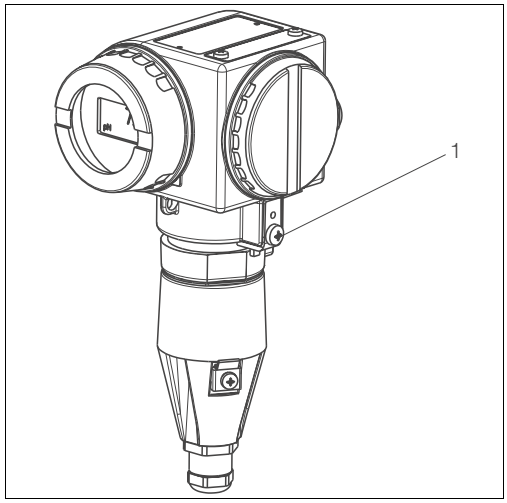

C07-CXM431ZZ-11-06-06-xx-001.eps

Fig. 10: Housing alignment

1 Adjusting screw

3.4.2 CLD 431

Mount the compact version into a pipe or tank by means of the flange connection (acc. to the ordered version).

☞ Caution!
The sensor must be immersed at least 50 mm (1.97") into the medium.

4. Tighten the thread with max.25 Nm.
5. If necessary, align the housing of the transmitter such that you have complete access to the operating keys and a clear view of the display.
   To do this, loosen the adjusting screw (Fig. 11), turn the housing into the desired position and tighten the screw again.

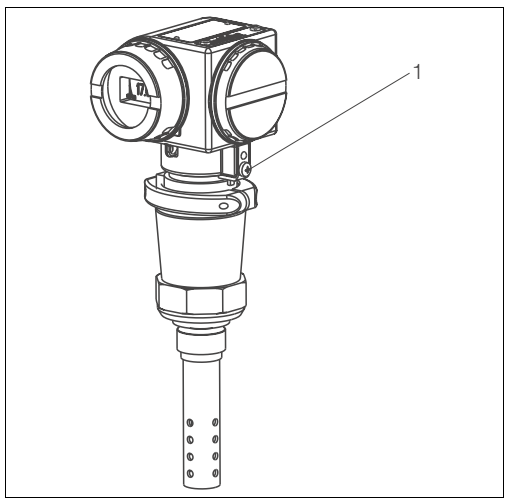

C07-CLD431cx-11-06-06-xx-002.eps

Fig. 11: Housing alignment

1 Adjusting screw

3.4.3 Rotating the display

You can rotate the display in four 90° steps.

1. Unscrew the lid over the display and push the tab towards the outside (Fig. 12).
2. Tilt the display forward and remove it.
3. Turn the removed display in 90 ° steps. Reinstall the desired orientation (Fig. 13). Ensure the display latches back into the guide.

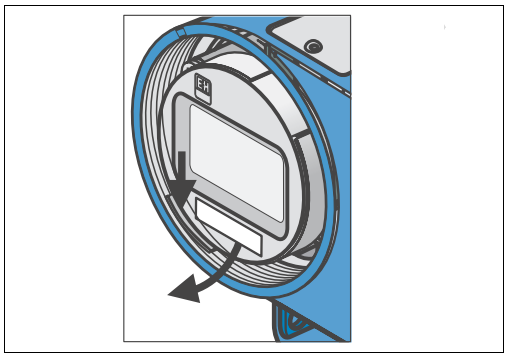

Fig. 12: Removing display

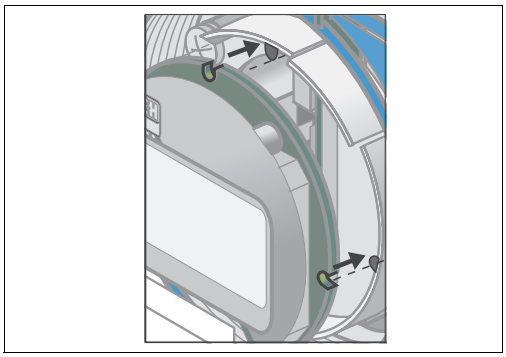

Fig. 13: Reinstalling display

3.5 Post-installation check

- After the installation, check the transmitter resp. the compact version for damages.
- With the compact version, check the sensor orientation to the flow direction of the medium.
- With the compact version, check the sensor immersion in the medium is at least 80 mm (3.15").

4 Wiring

4.1 Electrical connection

Warning!
- Technical personnel must have read and understood the instructions in this manual and must adhere to them.
- Ensure that there is no voltage at the power cable before beginning the connection work.

4.1.1 Electrical connection of the transmitter

The transmitter has separate terminal compartments for the power supply (bus cable) and for the sensor connection.
The bus cable simultaneously supplies power to MyPro. The terminals for the bus cable are under the screw cover on the right hand side of the display.

1. Unscrew the cover of the terminal compartment.
2. Guide the bus cable wire through the cable entry into the terminal compartment.
3. Connect the cable wires to the PA+ and PA- terminals. It makes no difference which wire you connect to which pole (+ or -).
4. Connect the screen of the bus cable to the ground terminal in the terminal compartment of the transmitter.
5. Screw the cover of the terminal compartment back on.
6. Make an additional ground connection to the transmitter by connecting a separate ground cable to the ground terminal of the housing (on the side of the housing to the right of the terminal compartment, on the bottom right in the diagram).

Caution!
- When mounting the transmitter on a pipe or mast, make an additional ground connection to the pipe or mast. This increases the interference resistance.
- Always use a screened bus cable for the connection. This is the only way to ensure that the device is interference-free according to its specifications.

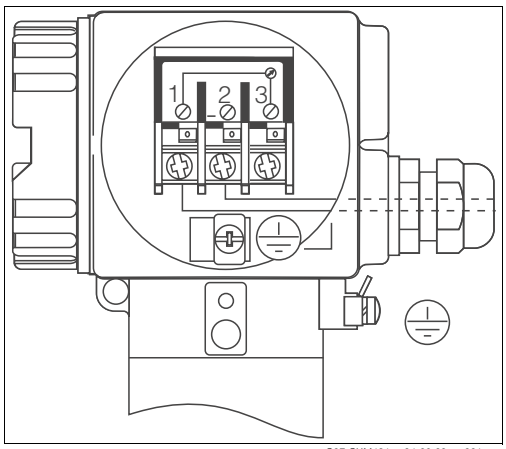

Fig. 14: Bus connection via armoured thread (Pg)

1 PA+
2 PA–
3 not connected

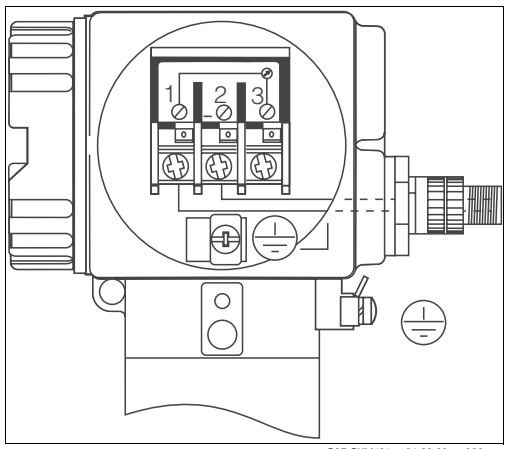

Fig. 15: Bus connection via M12 plug

1 PA+
2 PA–
3 not connected

4.1.2 Sensor connection

For the connection to MyPro CLM 431 you can use the conductive conductivity sensor ConduMax W CLS 12 with a measuring range from 0.04 to 20 µS/cm resp. 0.1 to 200 µS/cm (depending on cell constant), or any other conductive two-electrodes sensor.

Connect the sensor via the multi-core, screened cable CYK 71 as follows:

1. Loosen the fastening screws and pull off the connection hood (Fig. 16).

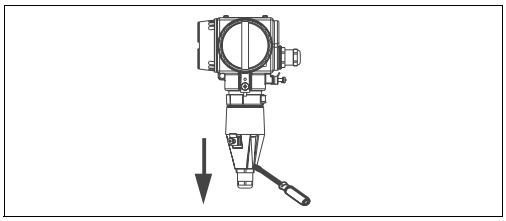

C07-CXM431ZZ-04-06-00-xx-001.eps

Fig. 16: Connection hood pulling-off

2. Loosen the Pg armoured thread on the connection hood and thread the cable through (Fig. 17).

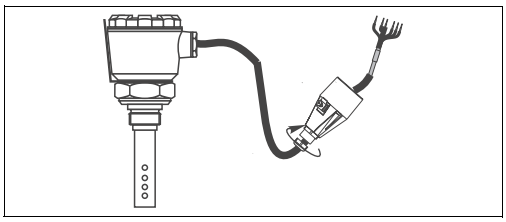

C07-CLM431iZ-04-06-00-xx-002.eps

Fig. 17: Cable threading through

3. Connect the sensor cable (Fig. 18) acc. to the terminal assignment diagram (Fig. 22).

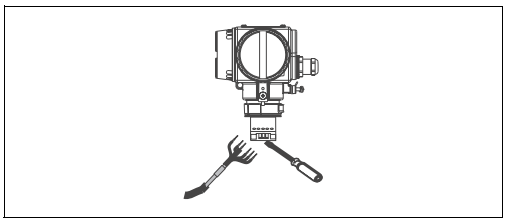

C07-CXM431ZZ-04-06-00-xx-003.eps

Fig. 18: Cable connection

4. Replace the connection hood and tighten the fastening screws.

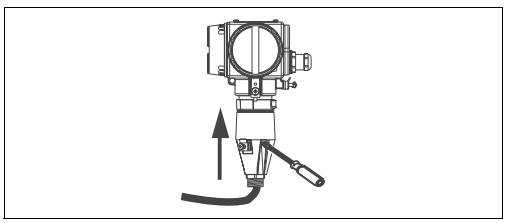

C07-CXM431ZZ-04-06-000-xx-004.eps

Fig. 19: Connection hood replacing

5. Connect the screen following sequence a to c (Fig. 20).

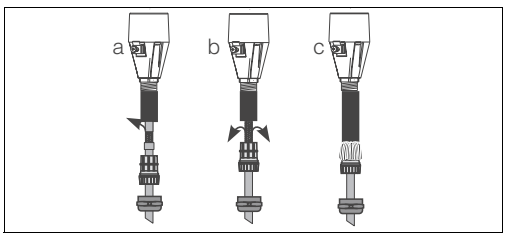

C07-CXM431ZZ-04-06-00-xx-005.eps

Fig. 20: Cable screening

6. Pull the cable through until the Pg armoured thread can grasp the cable insulation. Tighten the Pg armoured thread (Fig. 21).

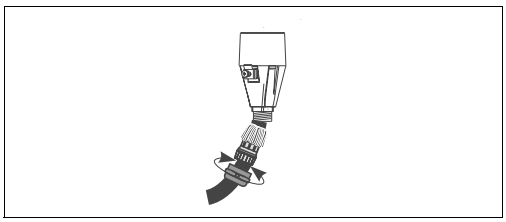

C07-CXM431ZZ-04-06-00-xx-006.eps

Fig. 21: Pg armoured thread tightening

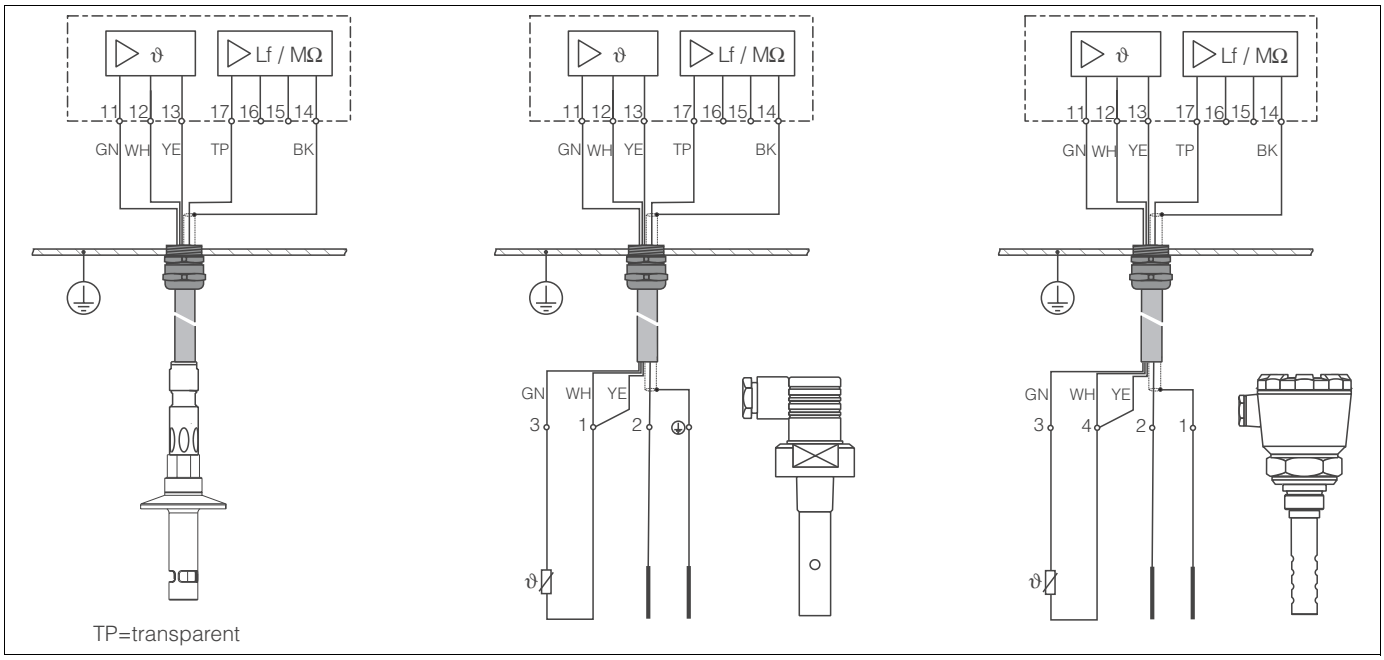

Fig. 22: Sensor connection and terminal assignment, left: CLS 16, middle: CLS 15/19/21, right: CLS 12/13

4.2 Post-connection check

After wiring up the electrical connection, carry out the following checks:

Device status and specifications	Remarks
Are the transmitter or the cable externally damaged?	Visual inspection

Electrical connection	Remarks
Are the installed cables strain-relieved?	
No loops and cross-overs in the cable run?	
Are the signal cables correctly connected acc. to the wiring diagram?	
Are all screw terminals tightened?	
Are all cable entries installed, tightened and sealed?	

5 Operation

5.1 Quick operation guide

For MyPro operation you have the following options:

1. Local operation via operating keys (see chapter "Local operation") or
2. Via PROFIBUS-PA with Commuwin II (see chapter "PROFIBUS-PA")

5.2 Local operation

5.2.1 Display

LC display, rotable

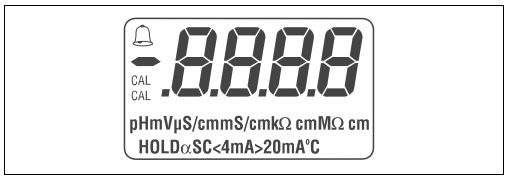

C07-CPM431ZZ-19-00-00-xx-001.EPS

Fig. 23: Display MyPro

5.2.2 Operating keys

The keys are located on the side of the transmitter under a hinged cover. With a pointed object, e.g. a biro, you can actuate the keys (Fig. 24). The sticker above the key pad shows the key arrangement.

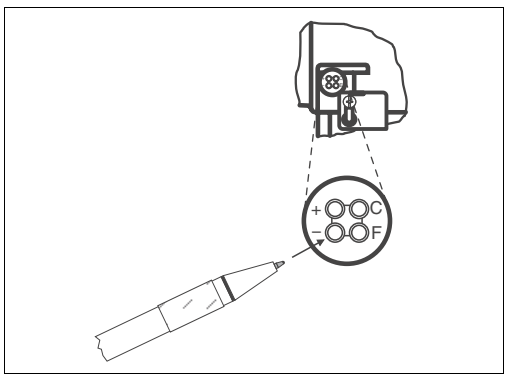

C07-CXM431ZZ-19-06-00-xx-003.eps

Fig. 24: MyPro operating keys

5.2.3 Operating levels

For the local operation there are two operation levels with the following functions:

Operation level 1

Key	Name	Function
+	Secondary parameter	Verification of active settings
-	Diagnosis parameter	Error diagnosis
F	Configuration	Current interface settings
C	Calibration	Sensor calibration

Operation level 2
This level comprises all other settings, e.g. the setting of diagnosis codes.

Note!
- Use the "+" and "-" keys to change settings.
  From the upper range end you can not get to the range beginning using the "+" key, resp. from the range beginning you can not get to the upper range end using the "-" key. You have to scroll up or down to the desired value!
- Check the complete operation matrix for the local operation in chapter "Appendix".

5.2.4 Locking concept

You can disable access to instrument operation and write protection via the keypad or via the communication interface.The keypad has priority over the interface, i.e. an instrument which has been locked in the field cannot be unlocked via the communication interface.

Note!
- The previous locking status is retained after a power failure or reset.
- The factory setting is "unlocked".

Lock resp. unlock MyPro as follows:

1. Press the keys "+" and "F" once at the same time.
   MyPro is locked for writing. You only can read parameters. If you attempt operation via keypad, "prot" for protected is displayed.
2. Press the keys "-" and "C" once at the same time. Instrument is unlocked, "free" is displayed.

Note!
Please, read for locking resp. unlocking via the communication interface chapter 5.3 "PROFIBUS-PA".

5.2.5 Operation level 1

Display mode selection

Use the operation keys to access the various display modes.

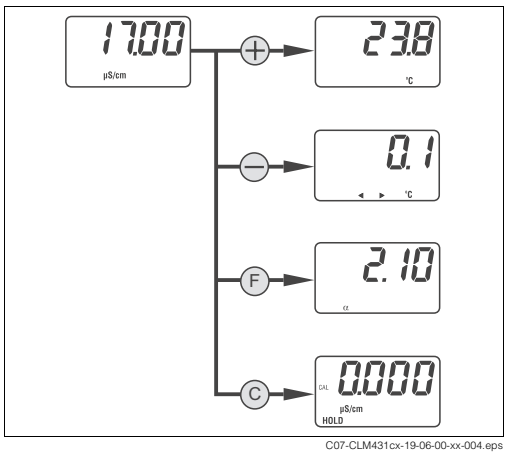

- Key "+":
  Menu "Secondary parameter"
- Key "-":
  Menu "Diagnosis parameter"
- Key "F":
  Menu "Parameter setup"
- Key "C":
  Menu "Calibration"

Fig. 25: Menu selection

Secondary parameter menu

The secondary parameter menu is used to display the temperature.

1. Press the "+" key .
   The temperature is displayed.
2. Press the "+" key again.
   The measured value (main parameter) is displayed.

Note!
If you do not press another key for 30 s, the instrument automatically switches back to the measured value display.

Diagnosis parameter menu

The diagnosis parameter menu shows the current offset values and the active diagnosis codes, beginning with the highest priority.
Press the "-" key to enter the menu. Press the "-" key again to show another parameter and finally to switch back to the measured value.

Note!
If you do not press another key for 30 s, the instrument automatically switches back to the measured value display.

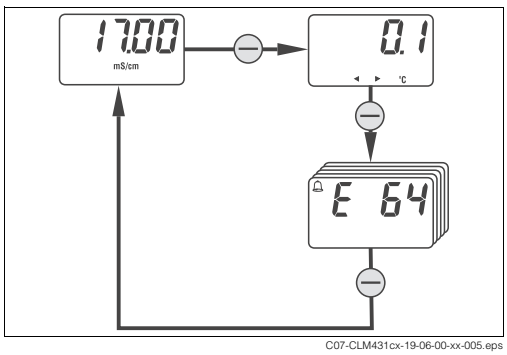

- Temperature offset
  Checking the temperature calibration
- Diagnosis codes
  Error messages, "E—" for no errors
  (see chapter "Trouble-shooting")

Fig. 26: Diagnosis parameter

Parameter setup

You can use the functions of this menu to display and setup the commissioning parameters.

1. Press the "F" key.
   The first parameter is displayed.
2. Press "+" or "-" to increase or decrease the value.
3. Press the "F" key to confirm the value and to display the next parameter.
4. After setting up the last parameter press "F" again.
   The display changes to the measured value.

Note!
If you do not press another key for 30 s, the instrument automatically switches back to the measured value display.

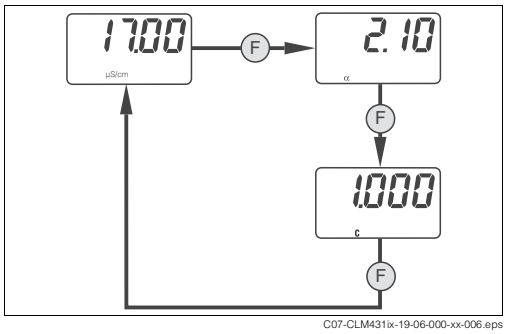

- Temperature coefficient
  current α value
  0.00 to 10.00 % / K
- Cell constant k
  current cell constant
  0.0025 to 99.99 cm^{-1} (0.001 to 39.37 $inch^{-1}$)

Fig. 27: Parameter setup

Calibration menu

The calibration menu of MyPro CLM 431/CLD 431 is used for temperature and conductivity calibration (Fig. 28).
The calibration, i.e. the determination of the cell constant, can be performed with or without automatic temperature compensation. The temperature coefficient and the uncompensated conductivity of the calibration solutions as a function of temperature are documented.

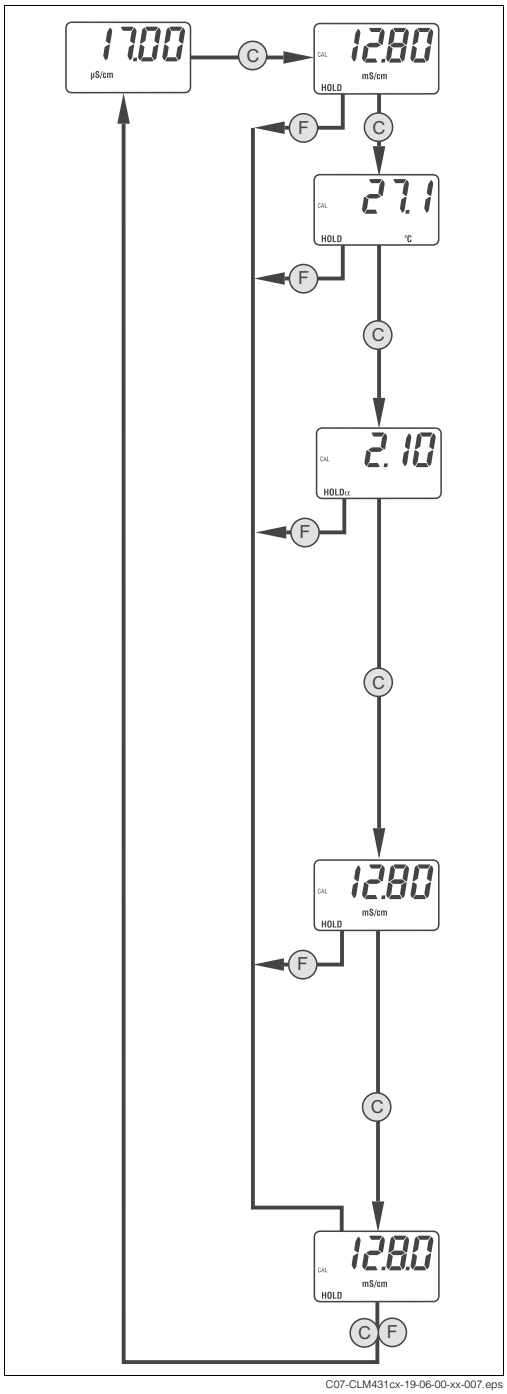

Fig. 28: Calibration menu

1. Press the "C" key in measurement operation. Calibration start is displayed.
2. Immerse the sensor into the calibration solution.
3. Press the "C" key.
   Measured temperature is displayed. If there is a difference between measured and actual temperature (externally measured), you can edit the value by means of the "+" and "–" keys. MyPro automatically determines the temperature offset (see "Diagnosis parameter").
4. Press the "C" key.
   Temperature coefficient
   If there is a difference between calibration solution temperature and reference temperature (MyPro), you must enter the temperature coefficient. You have two alternatives to proceed:
   – **Uncompensated measurement**[1]:
     Change the value to 0, i.e. the temperature coefficient α=0. In this case, you must know the conductivity value of the calibration solution at the **current** temperature.
   – **Compensated measurement**[1]:
     Enter the α–**value** for the calibration solution at the current temperature. This value can be found in the calibration solution's enclosures.
   Change the value by means of the "+" and "–" keys.
5. Press the "C" key.
   Enter the conductivity of the calibration solution. Ensure that you enter the correct value, depending on the previously selected type of measured value, compensated or uncompensated.
6. Press the "C" key. The calibration end is displayed.
   Return to the measuring mode by means of the "C" or "F" key.

1) Uncompensated conductivity means that the value is the actual conductivity at the current temperature in the medium and not related to a reference temperature. Conductivities can only be evaluated when the temperatures are equal. For this reason, the measured value is often calculated from a value at a reference temperature (e.g. 25 °C). This is compensated conductivity.

Note!
The calibration can be aborted at any time by pressing "F". In this case, you receive an error message.

5.2.6 Operation level 2

Operation level 2 covers advanced functions not included in level 1. These functions are arranged in menus by function groups.

1. In measuring mode press the "F" key for at least 3 seconds.
2. Press "+" resp. "-" to select the desired function group.
3. To enter the function group press the "F" key.
4. By pressing "F" again, you can select the desired function. Change the values by pressing "+" or "-".
5. Press the "F" key to acknowledge and proceed.

Note!
You can exit level 2 by pressing "F" for at least 3 seconds everytime.
If you do not press another key for 3 minutes, the instrument automatically switches back to the measured value display.

Function group 1

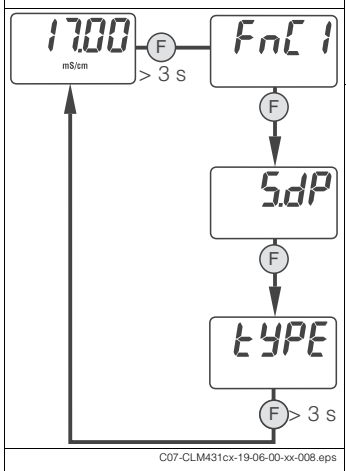

Fig. 29: Function group 1

Function	Setting range[1]	Description
Input damping SdP	1 ... 10 **1**	Number of samples used for averaging. This function describes the transmitter response to the input signal from the sensor.
Operating mode tYPE	**Cond** **rES**	Selection of operating mode: conductivity or specific resistance The transmitter default setting depends on the ordered version: CLM 431 - xxxxCx: conductivity CLM 431 - xxxxMx: specific resistance. Compact version default setting: conductivity.

1) Default setting = bold

Function group 2

	Function	Setting range[1]	Description
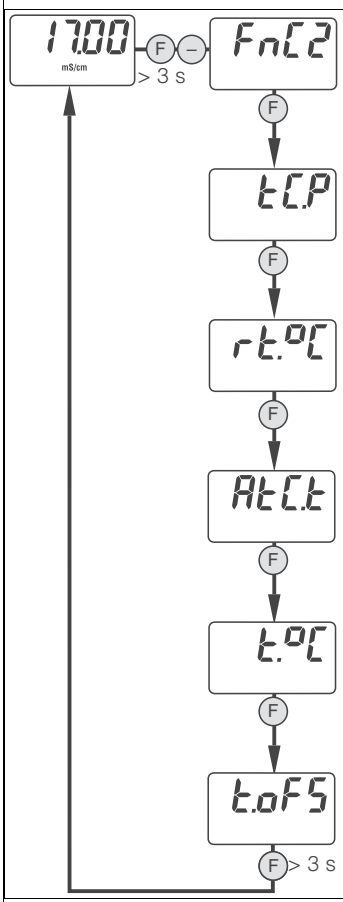 *Fig. 30: Function group 2*	Medium temperature compensation type tC.P	nonc = none **lin** = lineary nACL=NaCl tAb=α table	Selection of the mathematic function for the medium temperature compensation.
	Reference temperature rt.°C	–35 to 250 °C (–31 to 482 °F) **25 °C** (77 °F)	Reference temperature for automativ temperature compensation (compensated conductivity only).
	Temperature measuring AtC.t	off = off+MTC off.t = on+MTC **on.t**=on+ATC	Temperature measuring on/off and compensation type • off+MTC The manually preset temperature (see next table row) is used for compensation. • on+MTC Temperature measuring on (sensor with internal or external temperature sensor neccessary), manually preset temperature for compensation. • on+ATC Temperature measuring on, the measured temperature from the temperature sensor is used for compensation.
	MTC temperature t.°C	–35 to 250 °C (–31 to 482 °F) **25 °C** (77 °F)	Manual temperature compensation Enter the medium temperature (only then, if you do not use the automatically measured temperature for compensation).
	Temperature offset t.oFS	–20 ... 20 °C **0.0 °C**	Manual temperature offset (zero point) Enter the desired value or see the offset determined during calibration (at operating level 1 "read-only"). ✎ Note! The offset only exists if temperature measurement in function "AtC.t" is switched on (off.t oder on.t)!

1) Default setting = bold

Calibration parameters

	Function	Setting range[1]	Description
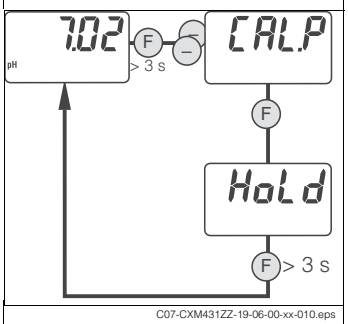 *Fig. 31: Function group Cal.P*	Hold	**on** off	Activates or deactivates the automatic Hold function for the current output during calibration. "Hold on" means, no measured values were registered and/or transmitted.

1) Default setting = bold

Alpha table (temperature compensation)

Use this function for a medium specific temperature compensation.
These settings are only important if α table is selected for medium temperature compensation ("tAb"=α table, at function group 2 / tC.P).
First enter table elements and then activate the table at "tAb". Otherwise the settings of this function group were applied immediately and you will receive an error message.

	Function	Setting range[1]	Description
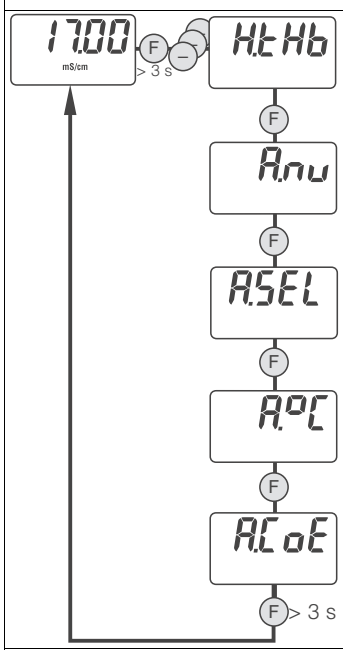 *Fig. 32: α table*	Number of elements A.nu	2 to 10 **1**	Number of elements (corresponds to table rows)
	Element selection A.Sel	1 to A.nu **1**	Element selection
	Temperature A.°C	–35 to +250 °C (–31 to 482 °F) **25 °C (77 °F)**	Temperature ✎ Note! The temperature values must increase from one element to the next. The rquired minimum difference is 10 K.
	Temperature coefficient A.CoE	0.0 to 10.00 % / K **2.10 % / K**	Enter the temperature coefficient.
	Table status C.St	**UAL**=o.k. Edit=in use CALC=please wait IUAL=invalid	Read only After the entry of the last elements select function group 2, function "tC.P" and select value "tAb". The α table is active now.

1) Default setting = bold

Polarisation monitoring

Conductive conductivity sensors are characterised by a limited measuring range which mainly depends on the cell constant, the sensor geometry and the surface of the electrodes. However, the exact application range limits of the sensor also depend on other factors, such as measuring frequency, electrode material, coating on the electrode, medium etc.
MyPro CLM 431 / CLD 431 employs a procedure permitting direct measurement of the polarisation effect. This method evaluates signals and issues an alarm whenever the cell constant has changed by more than 5 % due to polarisation effects.

	Function	Setting range[1]	Description
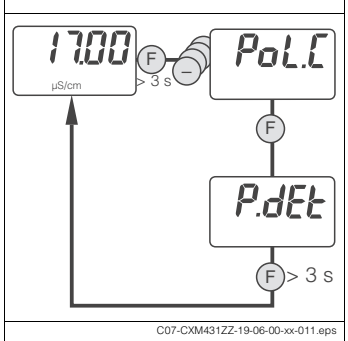 *Fig. 33: Polarisation monitoring*	Polarisation monitoring P.dEt	**on** off	Switch-on or switch-off of the polarisation monitoring When MyPro detects a polarisation effect (P.dEt to "on"), the error message E071 "Polarisation error" is displayed (with conductivity measurement only, not with resistance measurement).

1) Default setting = bold

Diagnosis

	Function	Setting range[1]	Description
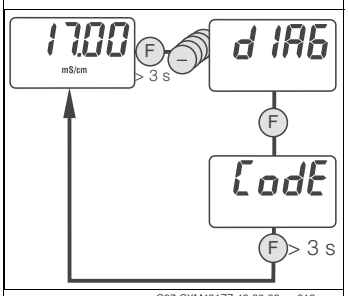 *Fig. 34: Diagnosis*	Unlock / lock CodE	0 to 9997 **97**	Operation unlock / lock Operation can be locked by entering a code. Code 97 means unlocked ✎ Note! Any other entry locks the transmitter. You can not unlock the transmitter by the key combination "+" and "F". Code 9999 means, the transmitter is locked by the key combination "+" and "F". You only can unlock the instrument by the key combination again. Code 9998 means, the transmitter was locked via the PROFIBUS interface. You only can unlock the transmitter via PROFIBUS.

1) Default setting = bold

Service/Simulation

	Function	Setting range[1]	Description
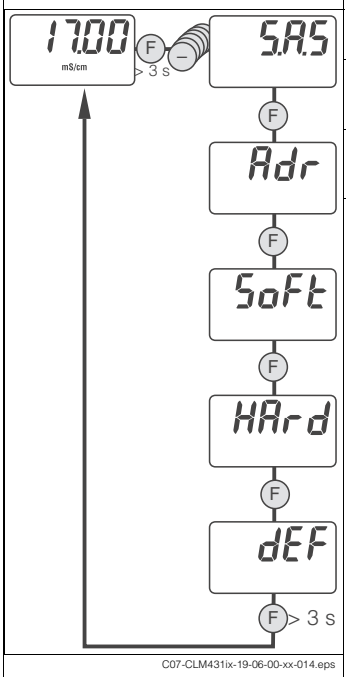 *Fig. 35: Service simulation*	Bus adress Adr	0 to 126 **126**	Enter the bus adress
	Software version Soft		Display of the software version
	Hardware version HArd		Display of the hardware version
	Default setting dEF	**no**=no reset InSt=reset device SEnS=reset sensor uSEr=device+sensor Adr=reset adress	Reset You can selectively reset all settings to the defaults (device specific settings (InSt), sensor specific settings (SEnS), all settings (uSEr)) or reset adress to 126.

1) Default setting = bold

5.3 Communication

5.3.1 Block model of PROFIBUS-PA

In the PROFIBUS-PA configuration, all the device parameters are categorised according to their functional properties and tasks and are generally assigned to three different blocks. A block may be regarded as a container in which parameters and the associated functionalities are contained.

A PROFIBUS-PA device has the following block types (see also Fig. 36):

- *A Physical Block (device block)*
  The Physical Block contains all device-specific features of the unit.
- *One or more Transducer Blocks*
  The Transducer Block contains all the measuring and device-specific parameters of the device. The measuring principles (e.g. conductivity, temperature) are depicted in the Transducer Blocks in accordance with the PROFIBUS-PA Profile 3.0 specification.
- *One or more function blocks*
  A function block contains the automation functions of the device. MyPro contains Analog Input blocks by means of which the measured values can be scaled and examined for limit value overshoot.

A number of automation-related tasks can be implemented with these blocks. In addition to these blocks, a transmitter can have any number of additional blocks, for example several Analog Input function blocks if the transmitter makes more than one process variable available.

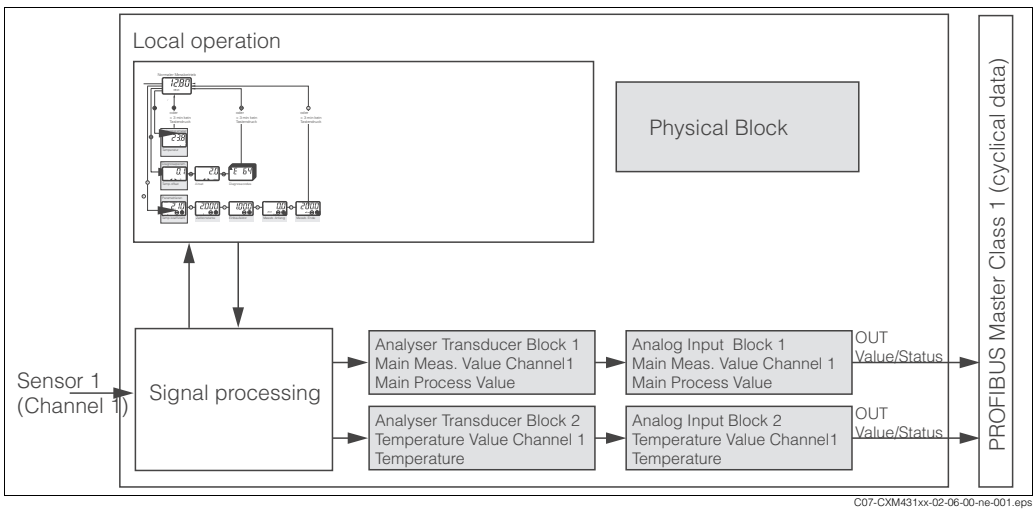

Fig. 36: Block model of MyPro

5.3.2 Cyclic data transfer

For the cyclic data exchange, MyPro provides the following modules as input data (data from the transmitter to the PLC):

1. Main Process Value
2. Temperature

The input data is transferred from MyPro in the following structure:

Input Data Index	Data	Access	Data Format	Configuration Data
0 ... 4	Analog Input Block 1 "Main Process Value"	read	Measured value (32-Bit floating point number[1]) Status Byte (0x80 = O.K.)	0x42, 0x84, 0x08, 0x05 or 0x42, 0x84, 0x81, 0x81
5 ... 9	Analog Input Block 2 "Temperature"	read	Measured value (32-Bit floating point number[1]) Status Byte (0x80 = O.K.)	0x42, 0x84, 0x08, 0x05 or 0x42, 0x84, 0x81, 0x81

1) Hexadecimal display as per IEEE standard 754 Floating Point Numbers

PROFIBUS processes data in hexadecimal code and converts it into 4 Byte (each 8 Bit, 4x8=32 Bit).
In accordance with IEEE 754, a number has three components

- Sign (S)
  The sign requires exactly 1 Bit and has the values 0 (+) or 1(-).
  Bit 7 of the 1st Byte of a 32-Bit floating point number defines the sign.
- Exponent
  The exponent is composed of Bits 6 to 0 of the 1st Byte plus Bit 7 of the 2nd Byte (= 8 Bit).
- Mantissa
  The remaining 23 Bits are used for the mantissa.

Byte 1								Byte 2								Byte 3								Byte 4							
7	6	5	4	3	2	1	0	7	6	5	4	3	2	1	0	7	6	5	4	3	2	1	0	7	6	5	4	3	2	1	0
	2^7	2^6	2^5	2^4	2^3	2^2	2^1	2^0	2^{-1}	2^{-2}	2^{-3}	2^{-4}	2^{-5}	2^{-6}	2^{-7}	2^{-8}	2^{-9}	2^{-10}	2^{-11}	2^{-12}	2^{-13}	2^{-14}	2^{-15}	2^{-16}	2^{-17}	2^{-18}	2^{-19}	2^{-20}	2^{-21}	2^{-22}	2^{-23}
S	Exponent							Mantissa																							

Formula (IEEE 754): Value $= (-1)^S * 2^{(\text{Exponent} - 127)} * (1 + \text{Mantissa})$

Example: 40 F0 00 00 (hexadecimal) = 0 10000001 1110000 00000000 00000000
Byte 1 Byte 2 Byte 3 Byte 4

Value $= (-1)^0 * 2^{(129 - 127)} * (1 + 2^{-1} + 2^{-2} + 2^{-3})$
$= 1 * 2^2 * (1 + 0.5 + 0.25 + 0.125)$
$= 1 * 4 * 1.875$
$= 7.5$

Unit selection

The system unit for one of the measured values can be changed via Commuwin II in the Analog Input Block.

Note!
Any change to the unit in the Analog Input Block does not initially have any influence on the measured value being transferred to the PLC. This ensures that an abrupt change cannot have any influence on the subsequent control.
If the unit change has an influence on the measured value, activate the SET_UNIT_TO_BUS function using Commuwin II (see "Commuwin II" chapter).

The unit can also be changed with the PV_SCALE and OUT_SCALE parameters (see "Rescaling the input value").

Cyclic data transfer customising

You can customise the cyclic telegram to better meet the requirements of a process. If you do not want to use all the cyclic data of MyPro, you can use the device configuration (Chk_Cfg) to eliminate individual data blocks from the cyclic telegram via the PLC software. Shortening the telegram improves the data throughput rate of a PROFIBUS-PA system.
To achieve the correct structure of the cyclic data telegram, the PROFIBUS master must send the identification FREE_PLACE (00h) for the non-active blocks.

Example:

Byte	Data	Status	Configuration data
0 ... 4	Main Process Value	active	0x42, 0x84, 0x08, 0x05
–	Temperature	not active	0x00

In this example, the cyclic data telegram contains 5 byte of input data. The configuration data string (CHK_CFG) is: 0x42, 0x84, 0x08, 0x05, 0x00.

Status codes of the OUT parameter

Status code	Device status	Meaning	Limits
0x00 0x01 0x02 0x03	BAD	non-specific	OK LOW_LIM HIGH_LIM CONST
0x04 0x05 0x06 0x07	BAD	configuration error	OK LOW_LIM HIGH_LIM CONST
0x0C 0x0D 0x0E 0x0F	BAD	device failure	OK LOW_LIM HIGH_LIM CONST
0x10 0x11 0x12 0x13	BAD	sensor failure (for temperature value only)	OK LOW_LIM HIGH_LIM CONST
0x1F	BAD	Out of service	CONST
0x47	UNCERTAIN	last usable value	CONST
0x4B	UNCERTAIN	substitute set	CONST
0x4F	UNCERTAIN	initial value	CONST
0x50 0x51 0x52 0x53	UNCERTAIN	sensor conversion not accurate	OK LOW_LIM HIGH_LIM CONST
0x5C 0x5D 0x5E 0x5F	UNCERTAIN	configuration error	OK LOW_LIM HIGH_LIM CONST
0x60 0x61 0x62 0x63	UNCERTAIN	simulated value	OK LOW_LIM HIGH_LIM CONST
0x64 0x65 0x66 0x67	UNCERTAIN	sensor calibration	OK LOW_LIM HIGH_LIM CONST
0x80 0x83	GOOD	ok	OK CONST
0x84 0x87	GOOD	update event	OK CONST
0x89 0x8A	GOOD	active advisory alarm (priority < 8)	LOW_LIM HIGH_LIM
0x8D 0x8E	GOOD	active critical alarm (priority > 8)	LOW_LIM HIGH_LIM

5.3.3 Configuration

Device Master Files (GSD)

The device is ready for system integration once commissioning has been effected via the local display or the Class 2 master (Commuwin II). The PROFIBUS-PA system requires a description of the device parameters, e.g. output data, input data, data format, data volume and supported transmission rate, so that it can integrate the field devices into the bus system.
These data are contained in a Device Master File (GSD file) which is placed at the disposal of the PROFIBUS-PA master while the communication system is being commissioned.
Device bitmaps can also be integrated. These appear as icons in the network tree.
The Profile 3.0 Device Master File (GSD) allows field devices from various manufacturers to be exchanged without having to reconfigure.

GSD file types

Note!
- Prior to configuration, decide which GSD you want to use to operate the system.
- You can change the setting by means of a Class 2 master (under Physical Block - Parameter Ident_Number_Selector).

The following two Device Master Files with different functionalities are available:
- **Manufacturer-specific GSD with Profile 3.0 functionality (default setting):**
  This GSD guarantees the unlimited functionality of the field device. Device-specific process parameters and functions are therefore available.
- **Profile GSD:**
  If a system is configured with profile GSDs, it is possible to exchange devices that are supplied by various manufacturers. It is, however, essential that the cyclic process values follow the same sequence.

Example:
The transmitter supports the profile *PA GSD 139750.gsd* (IEC 61158-2). This GSD comprises Analog Input blocks (AI).

The AI blocks are always assigned to the following measured variables:
- AI 1 = Main Process Value
- AI 2 = Temperature.

This guarantees that the first measured variable agrees with the field devices of other manufacturers.

GSD files for MyPro CLM 431 resp. CLD 431

Device name	Ident_number_ Selector	ID number	GSD	Bitmaps
Manufacturer-specific GSD with Profile 3.0 functionality:				
MyPro CLM 431 resp. CLD 431	1	150C Hex	EH3x150C.gsd	EH150C_d.bmp EH150C_n.bmp EH150C_s.bmp
Profile 3.0 GSD:				
MyPro CLM 431	0	9750 Hex	PA139750.gsd	PA_9750n.bmp

Note!
Each device is assigned an identification number (ID No.) by the Profibus User Organisation (PNO). The name of the Device Master File is derived from this. For Endress+Hauser, this ID No. starts with the manufacturer ID 15xx. In order to ensure clarity, the GSD names at Endress+Hauser are as follows:

EH3x15xx EH = Endress + Hauser
3 = Profile 3.0
x = Advanced identification
15xx = ID No.

The GSDs for all Endress+Hauser devices can be acquired via:
- Internet (E+H): http://www.endress.com
  Products / Process Solutions / PROFIBUS / GSD files
- Internet (PNO): http://www.profibus.com
  GSD library
- On CD-ROM from E+H: order number 56003894

Content of the download file resp. of the CD-ROM:
- all E+H GSDs
- E+H Bitmap files
- Additional information about the devices

Endress+Hauser GSD file structure

For the E+H transmitter with PROFIBUS interface, you receive all the data needed for configuration with one exe-file. Once unpacked, this file automatically creates the following structure:

At the top level, you have the measuring parameters available for the transmitter. Below this, you can find:
- “Revision x.xx” folder:
  This ID stands for the special device version. Device-specific bitmaps can be found in the “BMP” and “DIB” subdirectories.
- “GSD” folder
- “Info” folder:
  Information relating to the transmitter and any dependencies in the device software.

Note!
Please read this information carefully before configuring.

Working with GSD files

The GSDs must be integrated into the automation system.
Depending on the software that is being used, the GSD files can be copied to the program-specific directory or can be read into the database using the import function within the configuration software.

Example 1 : Siemens SPS S7-300 / 400 with configuration software Siemens STEP 7

- Copy the GSD files to the subdirectory:
  ...\ siemens \ step7 \ s7data \ gsd.
- The bitmap files also belong to the GSDs. These bitmap files are used to display the measuring points in image form. Load the bitmap files to the directory:
  ...\ siemens \ step7 \ s7data \ nsbmp.

Note!
Instead of "manually" copying the files you can use the "Device Installer" tool of PDM, the parameter setting tool of Siemens.

You can download the "Device Installer" via the E+H homepage as follows:
www.endress.com/Products/Product Portfolio/Process Solutions/Third-Party Tools and then select *Siemens Simatic PDM/PROFIBUS DDs for PDM*.

If you are using configuration software other than that referred to above, ask your PLC manufacturer which directory you should use.

Configuration examples

In general, a PROFIBUS system is configured as follows:

1. The field devices (MyPro), which are to be configured, are integrated into the configuration program of the automation system via the PROFIBUS network using the device master file. Required measured variables can be configured offline with the configuration software.
2. The automation system's user program should now be programmed. In the user program, the input and output data is, on the one hand, controlled and, on the other hand, it is defined where the measured variables are to be found, in order to be able to process them further. If necessary, an additional measured value conversion module must be used for an automation system which does not support the IEEE-754 floating point system. Depending on the type of data management in the automation system (Little-Endian-Format or Big-Endian-Format), it may also be necessary to convert the Byte sequence (Byte-Swapping).
3. After configuration is completed, it is transferred as a binary file into the automation system.
4. The system can now be started. The automation system establishes a connection to the configured devices. The process-relevant device parameters can now be set via a class 2 Master, e.g. using Commuwin II.

Simatic S7 HW-Konfig

Maximum configuration of MyPro by means of the manufacturer-specific GSD file.

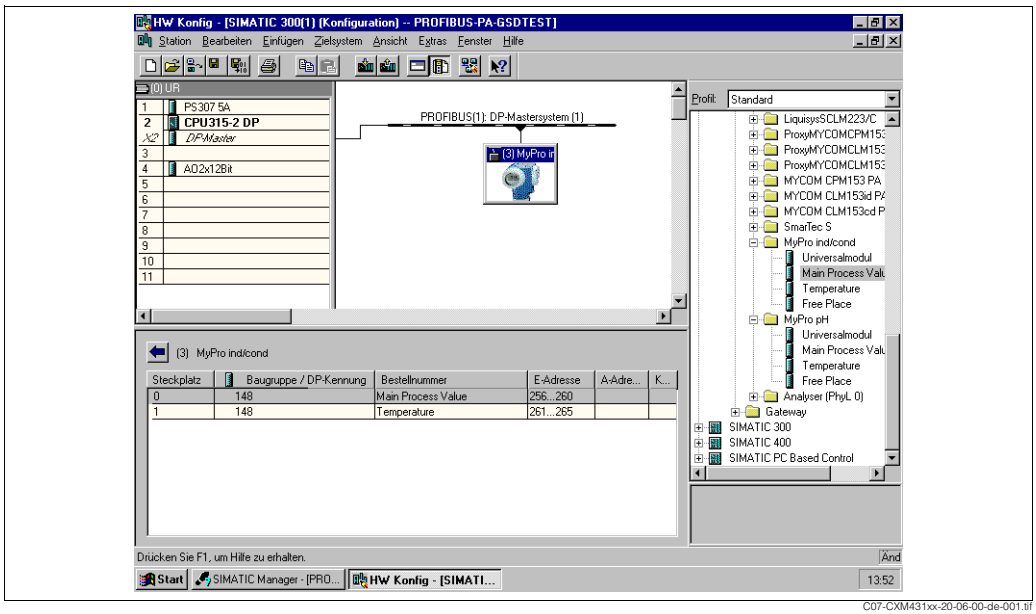

C07-CXM431xx-20-06-00-de-001.tif

Fig. 37: MyPro maximum configuration

Configuration data						
Byte length (input)	**Byte length (output)**	**Data blocks**	**Status**	**Access**	**GSD Block description**	**GSD Extended Block code**
0 ... 4	–	Analog Input Block 1 (main value)	active	read	Main Process Value	0x42, 0x84, 0x08, 0x05
5 ... 9	–	Analog Input Block 2 (temperature)	active	read	Temperature	0x42, 0x84, 0x08, 0x05

Simatic S7 HW-Konfig

Partial configuration of MyPro by means of the manufacturer-specific GSD file.

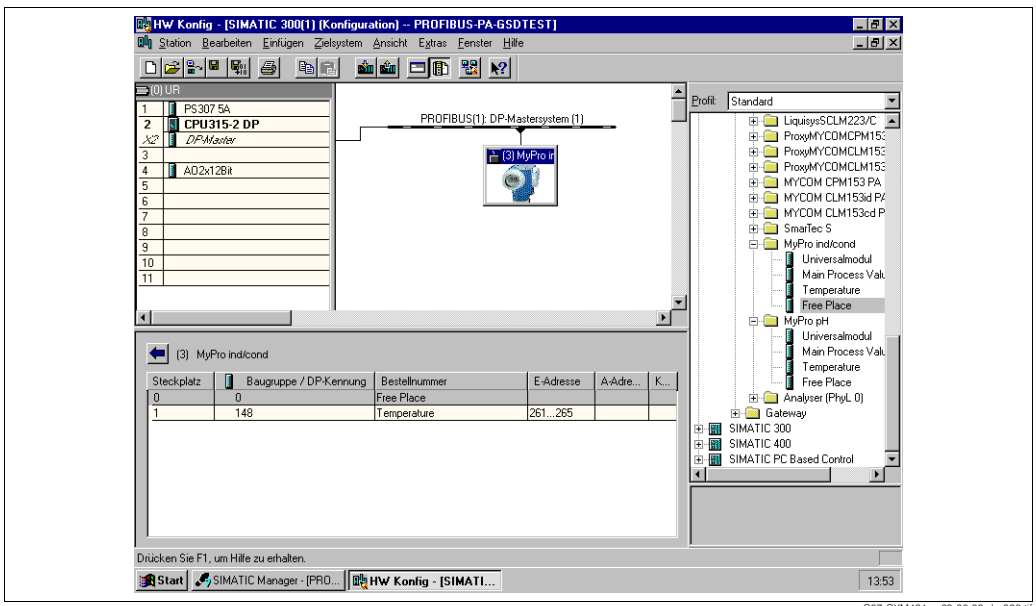

C07-CXM431xx-20-06-00-de-002.tif

Fig. 38: MyPro partial configuration

Configuration data						
Byte length (input)	**Byte length (output)**	**Data block**	**Status**	**Access**	**GSD Block description**	**GSD Extended Block code**
–	–	Free place	inactive	–	Free Place	0x00
0 ... 4	–	Analog Input Block 2 (temperature)	active	read	Temperature	0x42, 0x84, 0x08, 0x05

5.3.4 Acyclic data transfer

Acyclic data transmission is used to transfer parameters during commissioning, during maintenance or to display other measured variables that are not contained in the useful cyclic data traffic.
Generally, a distinction is made between Class 1 and Class 2 master connections. Depending on the implementation of the transmitter, it is possible to simultaneously establish several Class 2 connections.

- Two Class 2 masters are permitted with MyPro. This means that two Class 2 masters can access the transmitter at the same time. However, you must make certain that they do not both attempt to *write* to the same data. Otherwise the data consistency can no longer be guaranteed.
- When a Class 2 master reads parameters, it sends a request telegram to the transmitter specifying the device address, the slot/index and the expected record length. The transmitter answers with the requested record if the record exists and is the correct length (byte).
- When a Class 2 master writes parameters, it transmits the address of the transmitter, the slot and index, length information (byte) and the record. The transmitter acknowledges this write job after completion. A Class 2 master can access the blocks that are shown in the matrix in chapter "Commuwin II".

Physical Block

A Physical Block contains all the data that uniquely identify and characterise the transmitter. **It is an electronic version of a nameplate on the transmitter.**
Parameters of the Physical Block include the device type, device name, manufacturer ID, serial number, etc.
A further task of the Physical Block is the management of general parameters and functions that have an influence on the execution of the remaining blocks in the transmitter. The Physical Block is thus the central unit that also checks the device status and thereby influences or controls the operability of the other blocks and thus also of the device.
The following section describes in greater detail some services/functions which are not self-explanatory.

Write protection

By pressing the “+” and “F” keys simultaneously, you can lock the device for on-site configuration operations (see chapter "Local operation" / "Locking concept").
The HW_WRITE_PROTECTION parameter (see chapter "Commuwin II") indicates the status of the hardware write protection.

The following statuses are possible:
- *0: Hardware write protection enabled*
  Device data cannot be overwritten
- *1: Hardware write protection disabled*
  Device data can be overwritten
- *Software write protection*
  You can also set software write protection to prevent all parameters from being acyclically overwritten. You can do so by making an entry in the WRITE_LOCKING parameter (see chapter "Commuwin II"). The following entries are permitted:
  2457: Device data can be overwritten (default setting)
  0: Device data cannot be overwritten

LOCAL_OP_ENABLE

You can use the LOCAL_OP_ENABLE parameter to permit or lock local operation at the device. The following values are possible:

- 0: Deactivated.
  Local operation is locked. You can only change this status via the bus.
  The code 9998 is displayed in the local operation. The transmitter behaves just as with hardware write protection via the keyboard (see above).
- 1: Activated.
  Local operation is active. However, commands from the master have a higher priority than local commands.

Note!
Local operation is automatically activated if communication should fail for longer than 30 seconds.
If communication fails when local operation is locked, the device will immediately go to the locked status as soon as communication is functioning again.

FACTORY_RESET

You can reset the following data via the FACTORY_RESET parameter:

1	All data to PNO default settings
2506	MyPro warm start
2712	Bus adress
32768	Calibration data
32769	Settings

IDENT_NUMBER_SELECTOR

You can use the IDENT_NUMBER_SELECTOR parameter to switch the transmitter between two operating modes which each have a different functionality in relation to the cyclic data:

IDENT_NUMBER_SELECTOR	Functionality
0	Cyclic communication only possible with Profile GSD. Only standard diagnosis in cyclic data.
1 (Default)	Extended diagnosis in cyclic data. The manufacturer-specific GSD is required.

DIAGNOSIS und DIAGNOSIS EXTENSION

The parameters DIAGNOSIS and DIAGNOSIS_EXTENSION were produced from the device-specific error messages.
The values for the DIAGNOSIS and DIAGNOSIS_EXTENSION parameters (system error messages) can be found in chapter “Trouble-shooting” / "System error messages".

Analog Input Block

In the Analog Input function block, the process variables (conductivity and temperature) coming from the Transducer Block are prepared for the subsequent automation functions, (e.g. scaling and limit value processing). Two Analog Input function blocks are available to MyPro PROFIBUS-PA.
The following section describes in greater detail some services/functions which are not self-explanatory.

Signal processing

The Analog Input function block receives its input value from the Analyser Transducer Block. The input values are permanently assigned to each Analog Input function block:

- Main Process Value – Analog Input Function block 1 (AI 1)
- Temperature – Analog Input Function block 2 (AI 2)

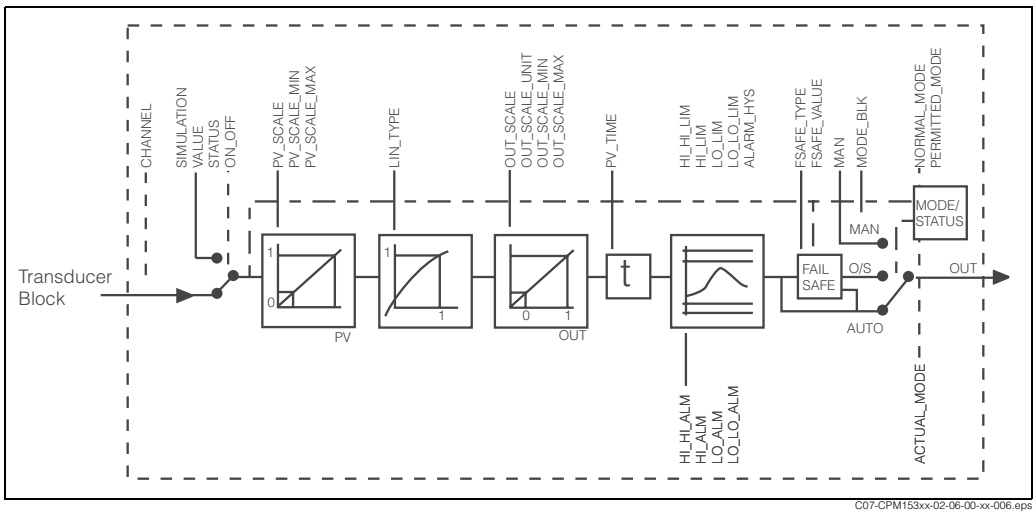

Fig. 39: Schematic internal structure of an Analog Input function block

SIMULATE

In the SIMULATE parameter group you can replace the input value with a simulation value and activate simulation. By specifying the status and the simulation value you can test the reaction of the automation system.

PV_FTIME

In the PV_FTIME parameter you can dampen the converted input value (primary value = PV) by specifying a filter time. If a time of 0 seconds is specified, the input value is not damped.

MODE_BLK

The MODE_BLK parameter group is used to select the operating mode of the Analog Input function block.

The following operating modes are avilable:
- AUTO (automatic operation)
- MAN (manual operation)
- O/S (out of service)

By selecting the MAN (manual) operating mode, you can directly specify the output value OUT and the OUT status.

OUT

The output value OUT is compared with warning limits and alarm limits (e.g. HI_LIM, LO_LO_LIM) which you can enter via various parameters. If one of these limit values is violated then this triggers a limit value process alarm (e.g. HI_ALM, LO_LO_ALM).

OUT status

The status of the Analog Input function block and the validity of the OUT output value are relayed to the downstream function blocks by means of the status of the OUT parameter group.

The following status values can be displayed:
- GOOD_NON_CASCADE
  The output value OUT is valid and can be used for further processing.
- UNCERTAIN
  The output value OUT can only be used for further processing to a limited extent.
- BAD
  The output value OUT is invalid. Occurs when the Analog Input function block is switched to the operating mode O/S (out of service) or in the event of serious errors (see chapter "Trouble-shooting" / "System error messages").

Additionally, other device functions influence the status of the OUT value:
- Automatic Hold
  If "Hold" is set, the OUT status will be set to BAD, not specific (0x00).
- Calibration
  During calibration the OUT status will be set to UNCERTAIN, sensor calibration (0x64) (applies also with Hold "on").

Input / output simulation

You can simulate the input and output of the function block by means of various parameters of the Analog Input function block:

1. Simulating the input of the Analog Input function block:
   The SIMULATION parameter group can be used to specify the input value (measured value and status). Since the simulation value runs through the entire function block, you can check all the parameter settings of the block.
2. Simulating the output of the Analog Input function block:
   Set the operating mode in the MODE_BLK parameter group to MAN and directly specify the desired output value in the OUT parameter.

FSAFE_TYPE

If an input or simulation value has the status BAD, the Analog Input function block uses the error response defined in the FSAFE_TYPE parameter.

The FSAFE_TYPE parameter offers the following error response options:
- FSAFE_VALUE (=default setting, value is "0")
  The value specified in the FSAFE_VALUE parameter is used for further processing.
- LAST_GOOD_VALUE
  The last good value is used for further processing.
- WRONG_VALUE
  The current value is used for further processing, despite the BAD status.

Note!
Error response is also activated if the Analog Input function block is set to the "OUT OF SERVICE" operating mode.

Input value scaling

In the Analog Input function block, the input value or input range can be scaled in accordance with the automation requirements.

Example:
- The system unit in the Transducer Block is °C.
- The measurement range of the device is –50 .. 150 °C.
- The output range to the automation system should be –58 °F ... 302 °F.
- The measured value from the Transducer Block (input value) is rescaled linearly via the input scaling PV_SCALE to the desired output range OUT_SCALE.
- Parameter group PV_SCALE
  PV_SCALE_MIN (V1H0) –50
  PV_SCALE_MAX (V1H1) 150
- Parameter group OUT_SCALE
  OUT_SCALE_MIN (V1H3) -58
  OUT_SCALE_MAX (V1H4) 302
  OUT_UNIT (V1H5) [°F]

The result is that with an input value of 25 °C, for example, a value of 77 °F is output via the OUT parameter (Fig. 40).

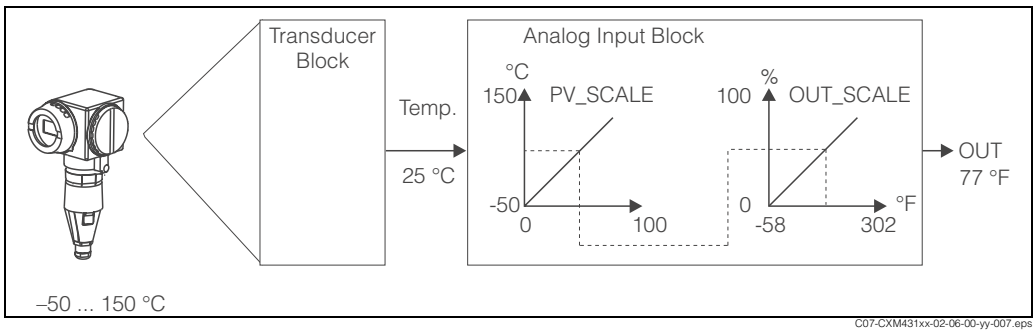

Fig. 40: Scaling of the input value in the Analog Input function block

Limit values

You can set two warning limits and two alarm limits for monitoring your process. The status of the measured value and the parameters of the limit-value alarms are indicative of the measured value's relative position. You also have the option of defining an alarm hysteresis in order to avoid frequent changes of the limit-value flags and frequent enabling/disabling of alarms.
The limit values are based on the output value OUT. If the output value OUT exceeds or undershoots the defined limit values, the automation system is alarmed via the limit value process alarms.

The following limit values can be defined:
- HI_HI_LIM – HI_LIM
- LO_LO_LIM – LO_LIM

Alarm detection and processing

Limit value process alarms are generated by the Analog Input function block.

The status of the limit value process alarms is communicated to the automation system by means of the following parameters:
- HI_HI_ALM – HI_ALM
- LO_LO_ALM – LO_ALM

Slot/Index tables

Device management

The device parameters (instructions) are listed in the following tables. You can access these parameters by means of the slot and index number.
The individual blocks each comprise standard parameters, block parameters and manufacturer-specific parameters to an extent.
In addition, the matrix positions for operation via Commuwin II are indicated.

Parameter	E+H-Matrix (CW II)[1]	Slot	Index	Size (bytes)	Type	Acc.	Store
DIR_OBJECT HEADER		1	0	12	Array of unsigned16	r	Cst.
COMP_LIST_DIR_ENTRIES		1	1	32	Array of unsigned16	r	Cst.
COMP_DIR_ENTRIES_CONTINUES		1	2	12	Array of unsigned16	r	Cst.

1) CW II = Commuwin II

Physical Block

Parameter	E+H matrix (CW II)	Slot	Index	Size (bytes)	Type	Acc.	Store
Standard parameter							
BLOCK_OBJECT		1	160	20	DS-32[1]	r	C
ST_REV		1	161	2	Unsigned16	r	N
TAG_DESC	VAH0	1	162	32	Octetstring	r, w	S
STRATEGY		1	163	2	Unsigned16	r, w	S
ALERT_KEY		1	164	1	Unsigned8	r, w	S
TARGET_MODE		1	165	1	Unsigned8	r, w	S

Parameter	E+H matrix (CW II)	Slot	Index	Size (bytes)	Type	Acc.	Store
MODE_BLK Actual Permitted Normal		1	166	3	DS-37[1] Unsigned8 Unsigned8 Unsigned8	r	 N Cst Cst
ALARM_SUM		1	167	8	DS-42[1]	r	D
Block parameter							
SOFTWARE_REVISION		1	168	16	Visible string	r	Cst
HARDWARE_REVISION		1	169	16	Visible string	r	Cst
DEVICE_MAN_ID		1	170	2	Unsigned16	r	Cst
DEVICE_ID		1	171	16	Visible string	r	Cst
DEVICE_SER_NUM		1	172	16	Visible string	r	Cst
DIAGNOSIS		1	173	4	Octetstring	r	D
DIAGNOSIS_EXTENSION		1	174	6	Octetstring	r	D
DIAGNOSIS_MASK		1	175	4	Octetstring	r	Cst
DIAGNOSIS_MASK_EXTENSION		1	176	6	Octetstring	r	Cst
DEVICE_CERTIFICATION		1	177	32	Visible string	r	N
WRITE_LOCKING		1	178	2	Unsigned16 0: acyclic refused 2457: writeable	r, w	N
FACTORY_RESET		1	179	2	Unsigned16 0x8000: Sensor reset Kalibrierdaten 0x8001: Set up data reset Einstelldaten 0x0001: PNO defaults alle Daten 2506: Warmstart 2712: Reset Busadr.	r, w	S
DESCRIPTOR		1	180	32	Octetstring	r, w	S
DEVICE_MESSAGE		1	181	32	Octetstring	r, w	S
DEVICE_INSTALL_DATE		1	182	16	Octetstring	r, w	S
LOCAL_OP_ENABLE		1	183	1	Unsigned8 0: disabled 1: enabled	r, w	N
IDENT_NUMBER_SELECTOR		1	184	1	Unsigned8 0: profile specific 1: manufacturer specific P 3.0	r, w	S
HW_WRITE_PROTECTION		1	185	1	Unsigned8 0: unprotected 1: protected	r	D
DEVICE_CONFIGURATION		1	196	32	Visible string	r	N
INIT_STATE		1	197	1	Unsigned8 2: run 5: maintenance	r, w	S
DEVICE_STATE		1	198	1	Unsigned8 1: status before reset 2: run 5: maintenance	r, w	D

Parameter	E+H matrix (CW II)	Slot	Index	Size (bytes)	Type	Acc.	Store
GLOBAL_STATUS		1	199	2	Unsigned16	r	D
Gap		1	200 - 207				
E+H parameter							
ACTUAL_ERROR	VAH2	1	208	2	Unsigned16	r	D
LAST_ERROR	VAH3	1	209	2	Unsigned16	r	D
UPDOWN_FEATURES_SUPP		1	210	1	Octetstring	r	C
DEVICE_BUS_ADRESS	VAH1	1	213	1	Signed8	r	N
SET_UNIT_TO_BUS	VAH9	1	214	1	Unsigned8 0: off 1: confirm	r, w	D
CLEAR_LAST_ERROR	VAH4	1	215	1	Unsigned8 0: off 1: confirm	r, w	D

1) Data strings acc. to PROFIBUS-PA specification part 1, version 3.0. These strings contain various elements with a sub index adress.

Analyser Transducer Block

The Analyser Transducer Block appears twice in MyPro. These are distributed to slots 1 – 2 in the following order:

1. Main Process Value
2. Temperature

Parameter	E+H matrix (CW II)	Slot	Index	Size (bytes)	Type	Acc.	Store
Standard parameter							
BLOCK_OBJECT		1 - 2	100	20	DS-32[1]	r	C
ST_REV		1 - 2	101	2	Unsigned16	r	N
TAG_DESC		1 - 2	102	32	Octetstring	r, w	S
STRATEGY		1 - 2	103	2	Unsigned16	r, w	S
ALERT_KEY		1 - 2	104	1	Unsigned8	r, w	S
TARGET_MODE		1 - 2	105	1	Unsigned8	r, w	S
MODE_BLK Actual Permitted Normal		1 - 2	106	3	DS-37[1] Unsigned8 Unsigned8 Unsigned8	r	 N Cst Cst
ALARM_SUM		1 - 2	107	8	DS-42[1]	r	D
Block parameter							
COMPONENT_NAME		1 - 2	108	32	Octetstring	r, w	S
PV		1 - 2	109	12	DS-60[1]	r	D
PV_UNIT		1 - 2	110	2	Unsigned16	r, w	S
PV_UNIT_TEXT		1 - 2	111	8	Visible string	r, w	S
ACTIVE_RANGE		1 - 2	112	1	Unsigned8 1: Range 1	r, w	S
AUTORANGE_ON		1 - 2	113	1	Boolean	r, w	S

Parameter	E+H matrix (CW II)	Slot	Index	Size (bytes)	Type	Acc.	Store
SAMPLING_RATE		1 - 2	114	4	Time_difference	r, w	S
Gap reserved PNO		1 - 2	115 - 124				
NUMBER_OF_RANGES		1 - 2	125	1	Unsigned8	r	N
RANGE_1		1 - 2	126	8	DS-61[1]	r, w	N

1) Data strings acc. to PROFIBUS-PA specification part 1, version 3.0. These strings contain various elements with a sub index adress.

Analog Input Block

The Analog Input block appears twice in MyPro. These are distributed to slots 1 – 2 in the following order:

1. Main Process Value
2. Temperature

Parameter	E+H matrix (CW II)	Slot	Index	Size (bytes)	Type	Acc.	Store
Standard parameter							
BLOCK_OBJECT		1 - 2	16	20	DS-32[1]	r	C
ST_REV		1 - 2	17	2	Unsigned16	r	N
TAG_DESC		1 - 2	18	32	Octetstring	r, w	S
STRATEGY		1 - 2	19	2	Unsigned16	r, w	S
ALERT_KEY		1 - 2	20	1	Unsigned8	r, w	S
TARGET_MODE		1 - 2	21	1	Unsigned8	r, w	S
MODE_BLK Actual Permitted Normal		1 - 2	22	3	DS-37[1] Unsigned8 Unsigned8 Unsigned8	r	 N Cst Cst
ALARM_SUM		1 - 2	23	8	DS-42[1]	r	D
BATCH		1 - 2	24	10	DS-67[1]	r, w	S
Gap		1 - 2	25				
Block parameter							
OUT		1 - 2	26	5	DS-33[1]	r	D
PV_SCALE		1 - 2	27	8	Float	r, w	S
OUT_SCALE		1 - 2	28	11	DS-36[1]	r, w	S
LIN_TYPE		1 - 2	29	1	Unsigned8	r, w	S
CHANNEL		1 - 2	30	2	Unsigned16	r, w	S
PV_FTIME		1 - 2	32	4	Float	r, w	S
FSAFE_TYPE		1 - 2	33	1	Unsigned8	r, w	S
FSAFE_VALUE		1 - 2	34	4	Float	r, w	S
ALARM_HYS		1 - 2	35	4	Float	r, w	S
HI_HI_LIM		1 - 2	37	4	Float	r, w	S
HI_LIM		1 - 2	39	4	Float	r, w	S
LO_LIM		1 - 2	41	4	Float	r, w	S
LO_LO_LIM		1 - 2	43	4	Float	r, w	S

Parameter	E+H matrix (CW II)	Slot	Index	Size (bytes)	Type	Acc.	Store
HI_HI_ALM		1 - 2	46	16	DS-39[1]	r	D
HI_ALM		1 - 2	47	16	DS-39[1]	r	D
LO_ALM		1 - 2	48	16	DS-39[1]	r	D
LO_LO_ALM		1 - 2	49	16	DS-39[1]	r	D
SIMULATE		1 - 2	50	6	DS-50[1]	r, w	S
VIEW_1		1 - 2	61	18	Unsigned8	r	D

1) Data strings acc. to PROFIBUS-PA specification part 1, version 3.0. These strings contain various elements with a sub index adress.

MyPro CLM 431 / CLD 431 (conductive) manufacturer-specific parameters

Parameter	E+H matrix (CW II)	Slot	Index	Size (bytes)	Type	Acc.	Store
Measured value	V0H0	3	100	4	Float	r	D
Temperature	V0H1	3	101	4	Float	r	D
Operating status	V0H2	3	102	1	Unsigned8 0: measuring 1..11: calibration 12..30: param. setup	r	D
Measuring unit	V0H3	3	103	1	Unsigned8 66: mS/cm 67: µS/cm 240: S/m 241: kΩ*cm 242: MΩ*cm	r, w	N
Signal damping	V0H4	3	104	1	Unsigned8	r, w	N
Measuring start	V0H5	3	105	4	Float	r	D
Measuring end	V0H6	3	106	4	Float	r	D
Operating status	V0H9	3	107	1	Unsigned8 1: conductivity 2: resistance	r, w	N
Remote calibration	V1H0	3	108	1	Unsigned8	r, w	D
Temperature coefficient	V1H1	3	109	4	Float	r, w	D
Medium temperature compensation	V1H2	3	110	1	Unsigned8 0: none 1: linear 2: NaCl 3: Table	r, w	N
Reference temperature	V1H3	3	111	4	Float	r, w	D
Cell constant	V1H5	3	112	4	Float	r, w	N
Cable resistance	V1H6	3	113	4	Float	r, w	N
Temperature compensation	V1H7	3	114	1	Unsigned8 0: off 1: MTC 2: ATC	r, w	N
MTC temperature	V1H8	3	115	4	Float	r, w	N
Temperature correction	V1H9	3	116	4	Float	r, w	N
Calibration solution conductivity	V2H0	3	117	4	Float	r, w	D

Parameter	E+H matrix (CW II)	Slot	Index	Size (bytes)	Type	Acc.	Store
Calibration solution temperature coefficient	V2H1	3	118	4	Float	r, w	N
Calibration temperature	V2H3	3	119	4	Float	r, w	N
Calibration auto hold	V2H9	3	120	1	Unsigned8 0: off 1: on	r, w	N
Number of elements alpha table	V6H0	3	121	1	Unsigned8	r, w	N
Element selection alpha table	V6H1	3	122	1	Unsigned8	r, w	D
Temperature alpha table	V6H2	3	123	4	Float	r, w	N
Alpha value alpha table	V6H3	3	124	4	Float	r, w	N
Status alpha table	V6H4	3	125	1	Unsigned8 0: Invalid 1: OK	r	D
Polarisation check	V7H0	3	126	1	Unsigned8 0: Off 1: On	r, w	N
Lock / unlock	V8H9	3	127	1	Unsigned8 97: not. prot. 9998: loc. op. disabl. 9999: hardw. prot.	r, w	N
Default settings	V9H5	3	130	1	Unsigned8 0: NO RESET 1: DEVICE DATA 2: SENSOR DATA 3: USER DATA	r, w	D
Software version	VAH5	3	128	1	Unsigned8	r	Cst
Hardware version	VAH6	3	129	1	Unsigned8	r	Cst

5.3.5 Commuwin II

You can access the block parameters by means of a PROFIBUS-PA Class 2 master such as Commuwin II.
Commuwin II is a graphic software with various communication protocols. Commuwin II runs on an IBM-compatible PC or laptop. The computer must be equipped with a PROFIBUS interface, i.e. PROFIBOARD for PCs and PROFICARD for laptops. During the system integration, the computer is registered as a Class 2 master.

Procedure:

1. Connection
   - Via Profiboard for connection to a PC
   - Via Proficard for connection to a laptop
2. Creation of live list (Fig. 41)
   - The PA-DPV1 server must be installed. The connection is made by selecting “PA-DPV1” in the “Connect” menu. The empty live list appears.
   - By means of the “Display with tag” checkbox, you can create the live list with tags.
   - There are two operating modes:
     – E+H standard operation is selected by clicking on the device name (the highlighted line in the graphic below).
     – Profile operation of the PROFIBUS standard blocks is selected by clicking on the appropriate tag (e.g. “AI: Main Process Value” for the Analog Input block of MyPro).
3. Device menu
   You can use the “Device” menu to choose between operation via the matrix or via the graphic interface.
   - In the case of **matrix operation**, the device or profile parameters are loaded in a matrix. This is the E+H standard matrix in the case of standard operation. In the case of profile operation, it is the block matrix of the selected block. You can change a parameter when the corresponding matrix field is selected.
   - In the case of **graphic operation**, the operating sequence is shown in a series of graphics with parameters. For profile operation, the graphics “Diagnosis”, “Scaling”, “Simulation” and “Block” are of interest.

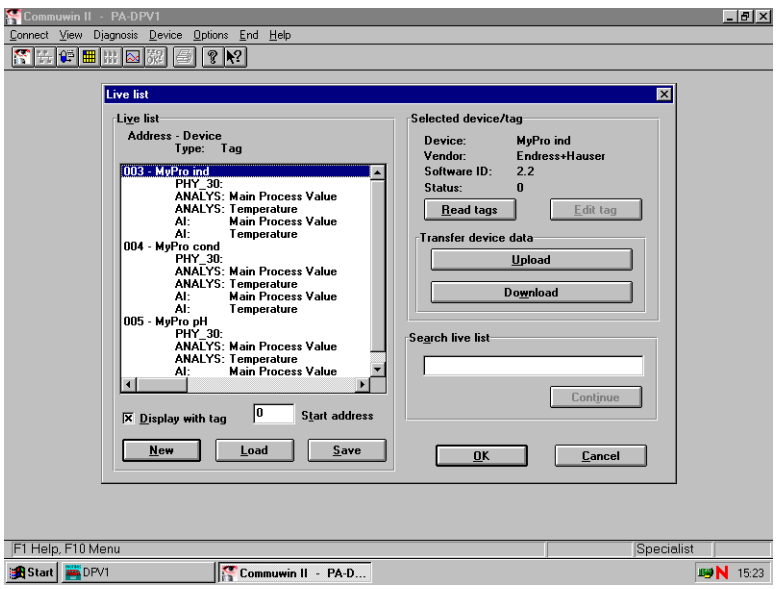

C07-CXM431-20-06-00-de-003.tif

Fig. 41: Live list

Note!
- The entire MyPro operating menu cannot be accessed via Commuwin II (Fig. 42).
- The matrix positions are marked as “V0...A” to indicate the vertical position and as “H0...9” to indicate the horizontal position.

	H0	H1	H2	H3	H4	H5	H6	H7	H8	H9
V0 MAIN PARAMETER	0.000 mS/cm MEASURED VALU	250.0 °C TEMPERATURE	MEASURING OPERATING STAT	ms/cm UNIT MEAS. VALUE	1 SIGNAL DAMPING	0.000 mS/cm LOWER RANGE VA	9999.000 mS/cm UPPER RANGE VA			CONDUCTIVITY OPERATING MOD
V1 MAIN FUNCTION	NO CAL. ACTIVE CALIBRATION	2.10 %/K TEMP.COEFFICIEN	LINEAR TC MEDIUM	25.0 ° C REFERENCE TEMP		2.000 1/cm CELL CONSTANT	0.000 Ohm CABLE RESISTAN	ATC+TEMP. ON TEMP.COMPENSA	25.0 ° C MTC TEMP. ENTRY	0.0 ° C TEMP.CORRECTIO
V2 CALIBR.PARAMETER	1.4060 mS/cm CONDUCT. SOLUT	2.10 %/K TC SOLUTION		250.0 °C TEMP. SOLUTION						OFF AUTO HOLD AT C
V3										
V4										
V5										
V6 ALPHA TABLE	4 TOT. NUMB. ELEM	1 SELECT ELEMENT	0.0 ° C TEMPERATURE VAL	2.1 %/K ALPHA VALUE	OK STATUS					
V7 POL. CHECK	OFF POL. ALARM									
V8 DIAGNOSIS										97 SECURITY LOCKI
V9 SERVICE SIMULATION						NO RESET DEFAULT VALUES				
VA USER INFORMATION	SET TAG NUMBER	4 INSTRUMENT ADR	10 DIAGNOSTIC COD	0 LAST SYSTEM ERR	BREAK CLEAR LAST ERR	210 SW VERSION	100 HW VERSION			BREAK SET UNIT TO BUS

C07-CLM431cx-02-06-00-en-011.eps

Fig. 42: CLM 431 conductive operation via Commuwin II

6 Commissioning

6.1 Function check

Warning!
- Check all connections for correctness.
- Make sure that the supply voltage is identical to the voltage written on the nameplate!

6.2 Bus configuration

The address is always to be set with a PROFIBUS-PA device. The process control system does not recognise the transmitter if the address is not set correctly.

All devices have the address 126 on leaving the factory. You can use this address for device function checking and for connecting to a PROFIBUS-PA network. You must change this address to be able to integrate additional devices.

Caution!
There is no cyclic data transfer via the adress 126!

The device address can be set via:
- Local operation,
- The PROFIBUS service Set_Slave_Add

Note!
- Valid device addresses are in the range 0... 125.
- Each address may only be given once in a PROFIBUS-PA network.

7 Maintenance

7.1 Cleaning

Clean the housing using commercially available cleaning agents.

The device front is resistant to (acc. to DIN 42 115):
- alcohol (short-term)
- diluted acids (max. 2% HCl)
- diluted alkalines (max. 3% NaOH)
- soap-based household detergents

Caution!
Do not use:
- concentrated mineral acids or alkalines
- benzyl alcohol
- methylene chloride
- high-pressure steam.

7.2 Repairs

Repairs may only be carried out by the manufacturer or by the Endress+Hauser service organisation.
In case of repairs, ask your Endress+Hauser sales centre (for adresses see backpage) or your supplier, please.

8 Accessories

8.1 Sensors

(for the transmitter only version)

❑ConduMax W CLS 12
Conductive conductivity sensor for standard, Ex and high temperature applications; Ordering acc. to version, see Technical Information TI 082/C07/en

❑ConduMax W CLS 13
Conductive conductivity sensor for standard, Ex and high temperature applications; Ordering acc. to version, see Technical Information TI 083/C07/en

❑ConduMax W CLS 15
Conductive conductivity sensor for pure and ultra-pure water applications (incl. Ex); Ordering acc. to version, see Technical Information TI 109/C07/en

❑ConduMax W CLS 16
Hygienic conductive conductivity sensor for pure and ultra-pure water applications; Ordering acc. to version, see Technical Information TI 227/C07/en

❑ConduMax W CLS 19
Conductive conductivity sensor for pure and ultra-pure water applications; Ordering acc. to version, see Technical Information TI 110/C07/en

❑ConduMax W CLS 21
Conductive conductivity sensor for applications with middle to high conductivity (incl. Ex); Ordering acc. to version, see Technical Information TI 085/C07/en

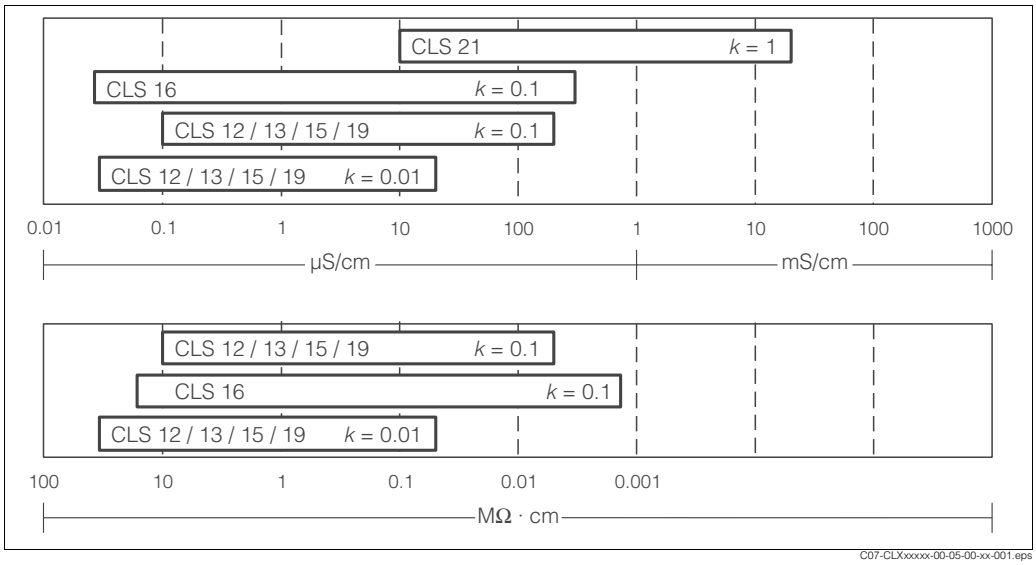

Fig. 43: Application ranges of conductive conductivity sensors:

top = conductivity

bottom = specific resistance

8.2 Cable

❑CYK 71
for conductive conductivity sensors, for cable extension via VBM junction box; order no. 50085333

❑CYK 71-Ex
for Ex applications, like CYK 71, but blue cable sheath; order no. 50085673

8.3 Assembly

(for compact version CLD 431)

❑CLA 751 flow assembly

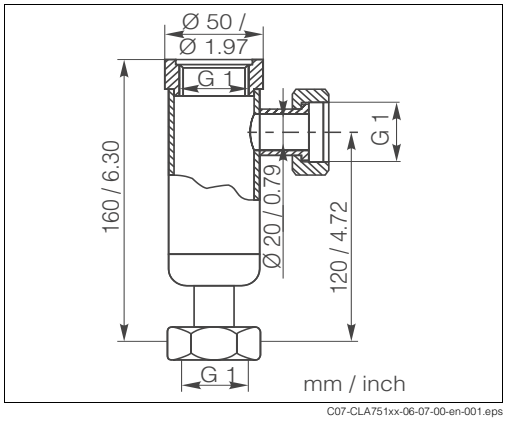

Fig. 44: CLA 751 flow assembly

For installation of conductivity sensors with G 1 thread.
Inlet (bottom) and outlet (lateral) DN 20 with union nuts G 1.
Stainless steel 1.4571 (AISI 316Ti)
Max. temperature: 160 °C / 320 °F
Max. pressure: 12 bar / 174 psi
Order no.: 50004201

Note!
For information on assemblies for the separate sensor version see Technical Information of the appropiate sensor.

8.4 Junction box

❑Junction box VBM
for cable extension from the sensor to the transmitter, Ingress protection IP 65; order no. 50003987

❑Junction box VBM-Ex
for cable extension in Ex zone 1, Ingress protection IP 65; order no. 50003991

8.5 Calibration solutions

Precision calibration solutions, acc. to SRM (Standard reference material) of NIST, Error limit ± 0,5 %, Reference temperature 25 °C (77 °F), with temperature table

❑CLY 11-A, 74.0 µS/cm, 500 ml (0.132 Us.gal); order no. 50081902
❑CLY 11-B, 149.6 µS/cm, 500 ml (0.132 Us.gal); order no. 50081903
❑CLY 11-C, 1.406 mS/cm, 500 ml (0.132 Us.gal); order no. 50081904
❑CLY 11-D, 12.64 mS/cm, 500 ml (0.132 Us.gal); order no. 50081905

8.6 Calibration set

❑Calibration set ConCal
Conductivity calibration set for ultrapure water applications,
complete, factory-calibrated measuring set with certificate, traceable to SRM of NIST and DKD, comparative measurement in ultrapure water applications up to 10 µS/cm
– 230 V AC, order no. 50083777
– 115 V AC, order no. 50083778

❑Recalibration ConCal
Factory recalibration and new issue of calibration certificate, traceable to SRM of NIST and DKD, factory calibration procedure according to ASTM D-5391-93;
order no. 51502486

8.7 PROFIBUS accessories

8.7.1 Software

❑Commuwin II
Graphic software for Windows for intelligent measuring devices
Communication via DDE interfaces. The serial interface of the PC or a special serial interface is used acc. to the application.
Ordering by product structure, see System information SI003S/04/en, order no. 56003947.

8.7.2 PROFIBUS connection box for PA

❑PROFIBUS connection box
For direct mounting to the transmitter.
Aluminium housing, IP 67, with four-pole plug connector and bus termination, two cable threads Pg 9.
order no. 017 481-0130

❑PROFIBUS connection box with earth capacitor
as above, additional internal earth capacitor.
order no. 017 481-0110

8.7.3 M12 device plug

❑Four-pole metal plug for mounting to the transmitter
For connection to the connection box or to a cable socket. Cable length 150 mm.
order no. 51502184

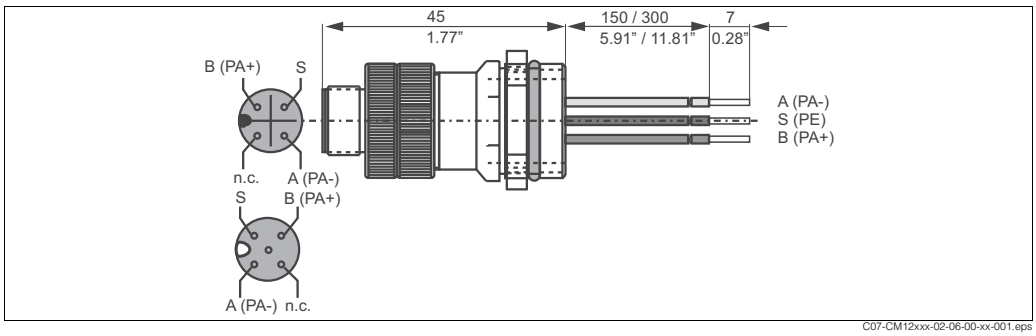

Fig. 45: M12 plug with socket

8.7.4 PROFIBUS adapter

❑Metal Y-adapter with two cable threads Pg 13.5.
order no. 51502183

8.7.5 Bus cable

❑Pre ready-made cable with M12 plug and M12 coupling of hard PU and nickel plated brass threads. IP 67, Screen connected to the thread, PVC sheath, 2/18 AWG, Temperature range –40 ... +70 °C (–40 ... +178 °F).
– Cable length 1 m (3.28 ft), order no. 52001025
– Cable length 2 m (6.56 ft), order no. 52001040
– Cable length 5 m (16.41 ft), order no. 52001041
– Cable length 10 m (32.81 ft), order no. 52001042

9 Trouble-shooting

9.1 Trouble-shooting instructions

9.1.1 Local operation system error messages

MyPro indicates errors by means of an alarm symbol flashing on the display.
The error can be identified in the "Diagnosis" menu via the diagnosis code (operation level 1, "-" key). Up to five entries are listed according to their priority.
The following table describes the diagnosis codes and the possible causes.

Diagnosis code	Error message	Measures
E001	EEPROM memory error	Switch device off and on again. Replace device or return it for repair, if necessary.
E002	Device not adjusted, adjustment data invalid, no user data available or user data invalid (EEPROM error)	
E007	Transmitter malfunction	
E008	Sensor connection faulty	Check sensor and sensor connection. Replace device or return it for repair, if necessary.
E010	No temperature sensor, Temperature sensor short-circuited	Check temperature sensor and connections or check the transmitter with temperature simulator.
E036	Sensor calibration range exceede	Clean sensor and proceed a new calibration. Check sensor connection, if necessary.
E037	Below sensor calibration range	
E045	Calibration aborded	Repeat calibration.
E057	Main parameter measuring range exceeded	Check measurement and the connections.
E059	Below temperature measuring range	
E061	Temperature measuring range exceeded	
E071	Fault measurement / polarisation	Clean sensor, check table, select an appropiate sensor.
E077	Temperature out of α-table	Clean the sensor and check the tables.
E101	Service function active	Switch off service function or witch off and on the transmitter.
E106	Download active	Wait for download to be finshed.
E116	Download error	Repeat download.
E150	Difference between temperature values in α-table to small or not monotonously increasing	Enter correct values (minimum difference between temperature values of 10 K required).

9.1.2 PROFIBUS-PA system error messages

Parameters DIAGNOSIS and DIAGNOSIS_EXTENSION are generated from device specific errors (see table).

NAMUR class	Error no.	Description	DIAGNOSIS	DIAGNOSIS_ EXTENSION	Measuring value status		
					Quality	Sub status	
Failure	E001	Memory error	01 00 00 80 - DIA_HW_ELECTR	01 00 00 00 00 00	BAD	device failure	0C
Failure	E002	EEPROM data error	10 00 00 80 - DIA_MEM_CHKSUM	02 00 00 00 00 00	BAD	device failure	0C
Failure	E007	Transmitter 1 faulty	20 00 00 80 - DIA_MEASUREMENT	04 00 00 00 00 00	BAD	device failure	0C
Failure	E010	Temperatur sensor 1 defective	20 00 00 80 - DIA_MEASUREMENT	10 00 00 00 00 00	BAD	sensor failure	10
Failure	E036	Sensor calibration range exceeded	20 00 00 80 - DIA_MEASUREMENT	40 00 00 00 00 00	BAD	configuration error	04
Failure	E037	Below sensor calibration range	20 00 00 80 - DIA_MEASUREMENT	80 00 00 00 00 00	BAD	configuration error	04
Failure	E045	Calibration aborded	20 00 00 80 - DIA_MEASUREMENT	00 01 00 00 00 00	BAD	configuration error	04
Failure	E057	Main parameter display range exceeded	20 00 00 80 - DIA_MEASUREMENT	00 10 00 00 00 00	UNCERTAIN	sensor conversion not accurate	50
Failure	E059	Below temperature range	20 00 00 80 - DIA_MEASUREMENT	00 20 00 00 00 00	UNCERTAIN	sensor conversion not accurate	50
Failure	E061	Temperature range eceeded	20 00 00 80 - DIA_MEASUREMENT	00 40 00 00 00 00	UNCERTAIN	sensor conversion not accurate	50
Failure	E071	Polarisation fault	20 00 00 80 - DIA_MEASUREMENT	00 00 08 00 00 00	BAD	sensor failure	10
Failure	E077	Temperature out of α-table	00 04 00 80 - DIA_CONF_INVAL	00 80 00 00 00 00	BAD	configuration error	04
Function check	E101	Service function active			–	–	
Function check	E106	Download active	00 00 00 80 - EXTENSION_AVAILABLE	00 00 00 00 00 80	–	–	
Failure	E116	Download error	00 04 00 80 - DIA_CONF_INVAL	00 00 04 00 00 00	BAD	configuration error	04
Mainten ance	E150	Difference of the temperature values or α-value to small	00 20 00 80 - DIA_MAINTENANCE	00 00 00 01 00 00	UNCERTAIN	configuration error	5C

9.2 Spare parts

9.2.1 Design of the transmitter only version CLM 431

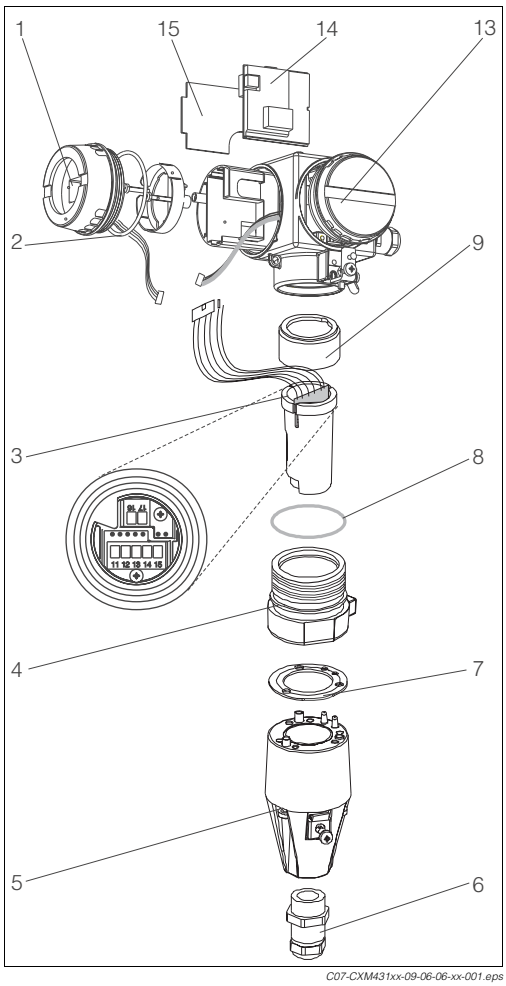

1	*Display module*
2	*O-ring*
3	*Terminal block for sensor connection*
4	*Flange*
5	*Connection hood*
6	*Pg thread with protection plug*
7	*Seal*
8	*O-ring*
9	*Nut M38x1.5*
13	*Housing, pre-mounted*
14	*Main module*
15	*Transmitter module*

Fig. 46: CLM 431 components

9.2.2 Design of the compact version CLD 431

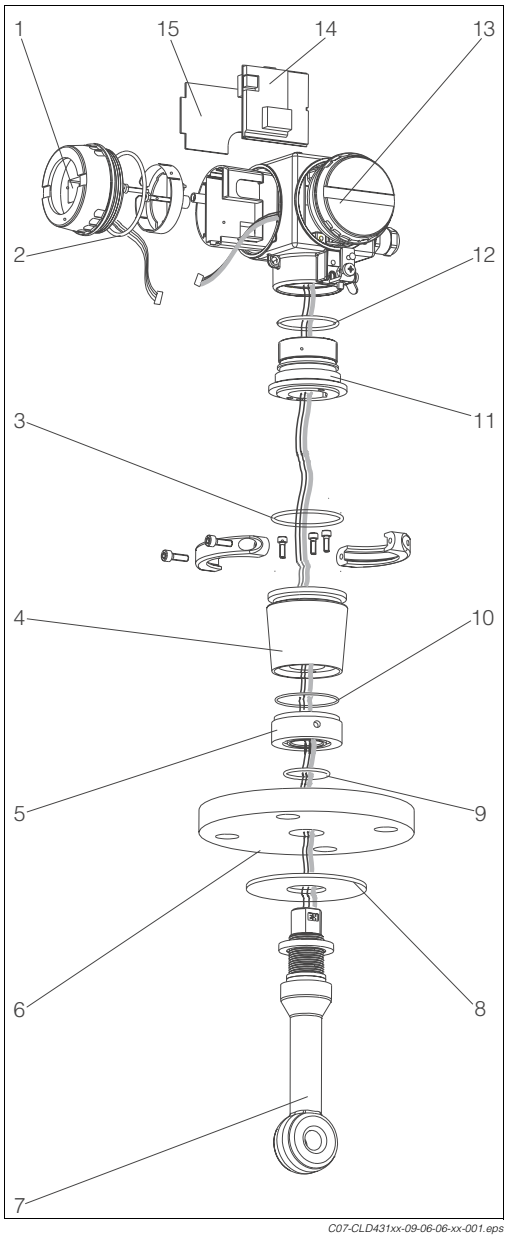

1	*Display module*
2, 3	*O-ring*
4	*Adapter S*
5	*Ring nut M=20 Nm*
6	*Flange*
7	*Sensor CLS 50*
8	*Sealing disc (PFA sensor only)*
9, 10	*O-ring*
11	*Adapter M*
12	*O-ring*
13	*Housing, pre-mounted*
14	*Main module*
15	*Transmitter module*

Fig. 47: CLD 431 components

9.2.3 Ordering spare parts

- Kit CXX431 MEK
  Display module, Ex/non-Ex
  order no. 51501610
- Kit MKIC
  Transmitter module, Ex/non-Ex
  order no. 51501206
- Kit CLX431 MEK
  Main module, conductive conductivity, PROFIBUS-PA, Ex/non-Ex
  order no. 51501617
- Kit CLM431 MEK
  Sensor terminal block, conductive conductivity
  order no. 51503381
- Kit CXM431 MEK
  Sensor terminals double-pole and five-pole, 5 pieces each; order no. 51505580

9.3 Return

If the device requires repair, please send it *cleaned* to the appropriate Endress+Hauser sales office.
Please use the original packaging, if possible.
Please enclose the completed Dangerous Goods sheet (copy the second last page of these Operating Instructions) with the packaging and the transportation documents.

9.4 Disposal

The device contains electronic components and must therefore be disposed of in accordance with regulations on the disposal of electronic waste.
Please observe local regulations.

10 Technical data

10.1 Input

Measured variable	Conductivity Specific resistance Temperature	
Measuring range	Conductivity:	0 ... 2000 mS/cm (uncompensated)
	Specific resistance:	0 ... 86 MΩ · cm
Temperature measurement	Pt 100	
Cable specification	maximum cable length (with CYK 71 cable): – conductivity: 100 m (328.1 ft), Ex version 16 m (52.5 ft) – specific resistance: 15 m (49.22 ft)	

10.2 Signal output

Output signal	Digital communication signal, PROFIBUS-PA
Signal on alarm	Status and alarm messages acc. to PROFIBUS-PA, to EN 50 170 Part 4, IEC 1158-2, Profile 3.0 Display: error code
PA function	Slave
Übertragungsrate	31.25 kBit/s
Signal coding	Manchester II
Slave response time	approx. 20 ms
Physical layer	IEC 1158-2
Bus voltage	9 ... 32 V
Bus current consumption	10 mA ± 1 mA
Switch-on current	acc. to table 4, IEC 1158-2

10.3 Performance characteristics

Measured value resolution	Conductivity: Temperature:	max. 0.01 µS/cm (in lowest range) 0.1 °C (0.18 °F)
Maximum measured error[1]	Conductivity: Temperature:	0.5% of measuring range ± 4 digits max. 1 °C (1.8 °F)
Repeatability[1]	Conductivity: Temperature:	≤ 0.2% of measuring range ± 2 digits 0.5% of measuring range ± 4 digits
Cell constant	CLM 431:	0.0025 ... 99.99 cm^{-1} (ajustable, acc. to sensor)
	CLD 431 - xxxxCA: CLD 431 - xxxxCB: CLD 431 - xxxxCC: CLD 431 - xxxxCD:	0.01 cm^{-1} 0.1 cm^{-1} 0.01 cm^{-1} 0.1 cm^{-1}
Temperature compensation	Range: Compensation type:	–35 ... +250 °C (–31 ... 482 °F) no (α=0), lineary, table, NaCl
Temperature offset	adjustable –20 ... +20 °C (–4 ... 68 °F)	

1) acc. to DIN IEC 746 part 1, reference operating conditions

10.4 Environment

Ambient temperature range	–10 ... +55 °C
Ambient temperature limits	–20 ... +60 °C (non-Ex version) –15 ... +55 °C (Ex version)
Storage temperature	–25 ... +70 °C
Electromagnetic compatibility	Interference emission and interference immunity acc. to EN 61326: 1997 / A1: 1998
Ingress protection	IP 65
Humidity	10 ... 95%, non-condensing

10.5 Process compact version CLD 431

Medium temperature

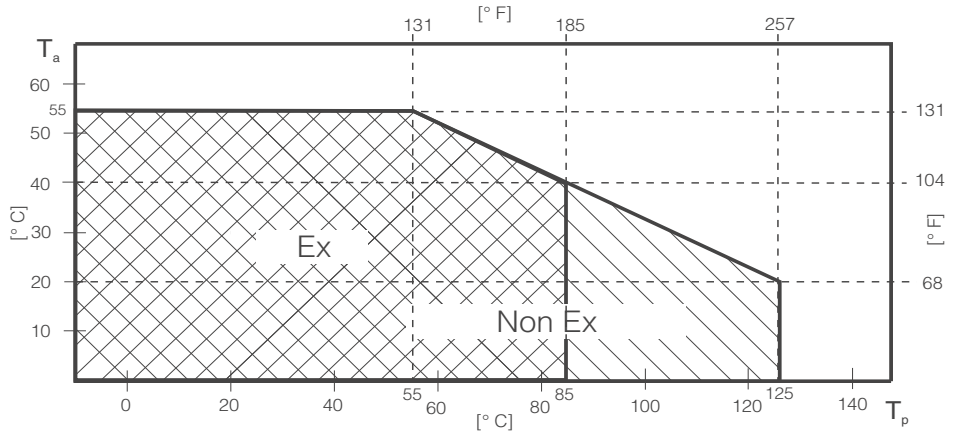

C07-CLD431IZ-05-06-00-en-001.eps

Fig. 48: Ambient temperature (T_a) vs. process temperature (T_p)

Pressure temperature diagram

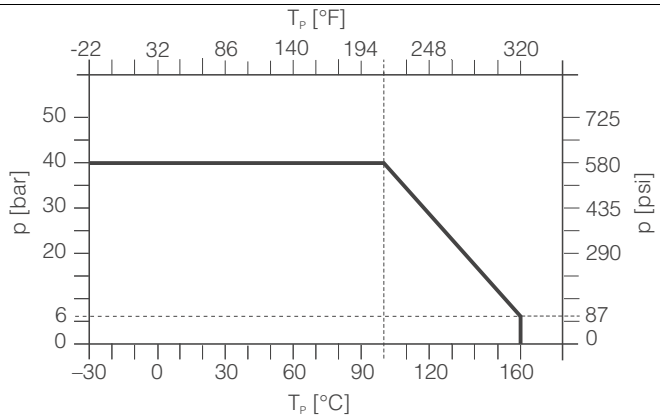

C07-CLS12xxx-05-05-00-en-002.eps

Fig. 49: CLD 431 compact version pressure temperature diagram

10.6 Mechanical construction

Design, dimensions	CLM 431:	H x W x D: 227 x 104 x137 mm (8.94" x 4.09" x 5.39")
	CLD 431:	Length incl. sensor: 321 mm (12.64")
Weight	CLM 431:	max. 1.25 kg (2.8 lb)
	CLD 431:	ca. 4.5 kg (9.9 lb)
Material, not in contact with medium	Housing of GD-AISI 10 Mg, plastic coated	
Material in contact with medium	Stainless steel 1.4571 (AISI 316L), EPDM, PEEK	

10.7 Human interface

Local operation	via keys, see "Local operation" chapter
PC operation	via PROFIBUS-PA with Commuwin II
Bus adress	via keys or via Set_Slave_Adr
Commun ication interface	PROFIBUS-PA

10.8 Certificates and approvals

PROFIBUS-PA	MBP (Manchester coded, bus powered) acc. to IEC 61158-2, EN 50170 part A2 DIN 19 245, part 4 PNO rules for PROFIBUS-PA
PROFIBUS	EN 50 170, part 2; DIN 19 245, part 1-3
Intrinsic safety	EN 50 020; FISCO model; IEC 79-14
Physical layer	EN 61 158-2; IEC 1158-2

11 Appendix

Local operation matrix

Operating level 1

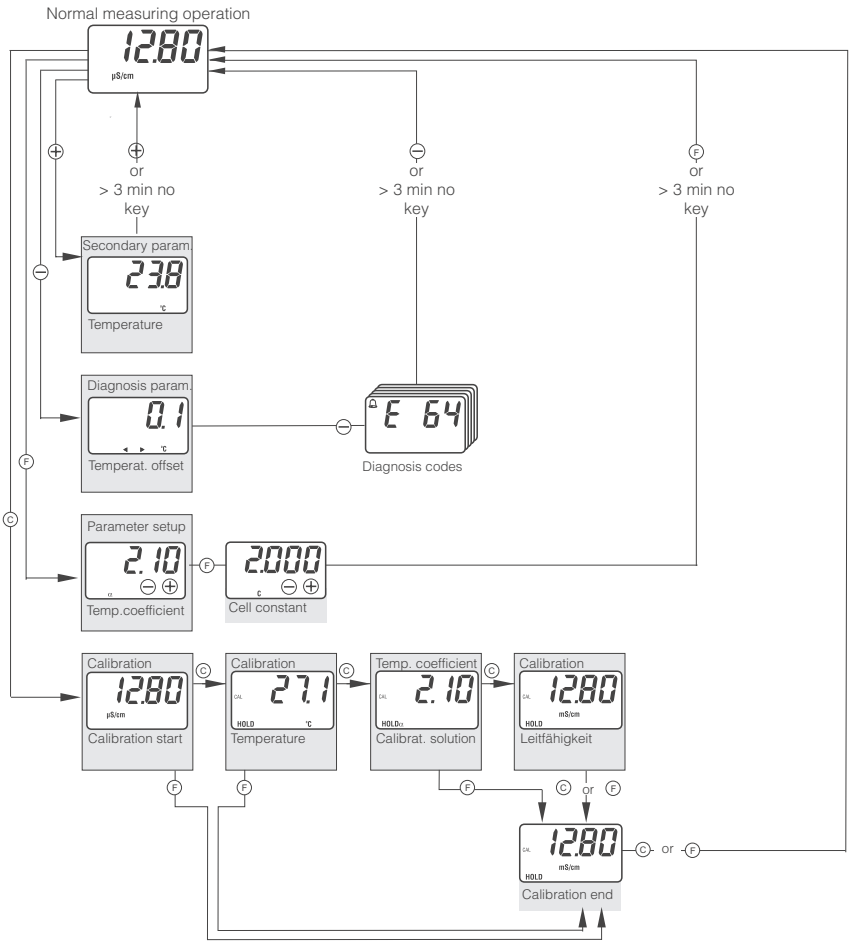

The display values of this overview are examples.
They may be different for your application.

C07-CLM431cx-13-06-00-en-001.eps

Operating level 2

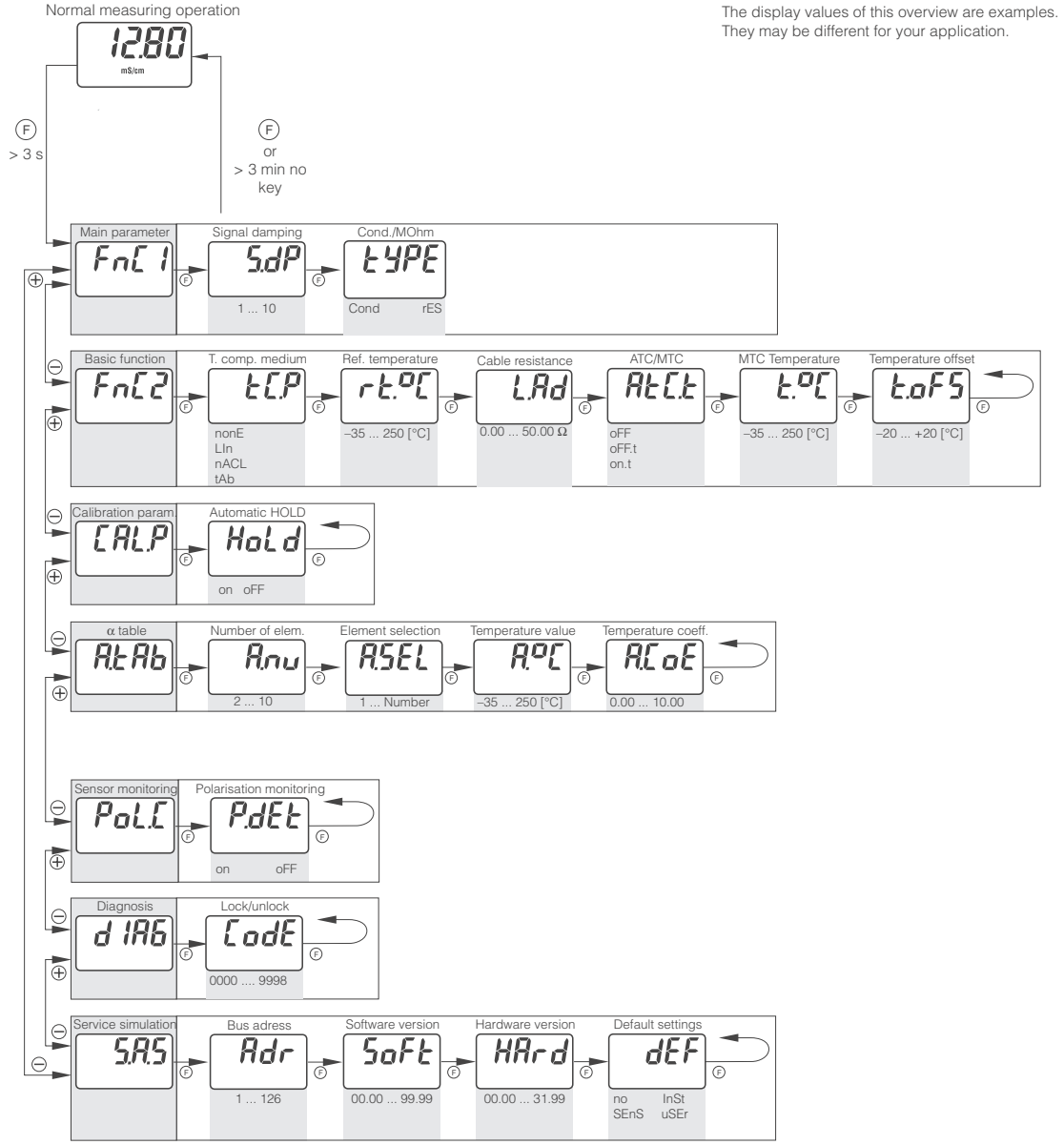

C07-CLM431cx-13-06-00-en-002.eps

Index

Declaration of contamination

Dear customer,
Because of legal determinations and for the safety of our employees and operating equipment we need this "Declaration of contamination" with your signature before your order can be handled. Please put the completely filled in declaration to the instrument and to the shipping documents in any case. Add also safety sheets and/or specific handling instructions if necessary.

type of instrument / sensor: _____ serial number: _____

medium / concentration: _____ temperature: _____ pressure: _____

cleaned with: _____ conductivity: _____ viscosity: _____

Warning hints for medium used:

☐ radioactive ☐ explosive ☐ caustic ☐ poisonous ☐ harmful to health ☐ biologically hazardous ☐ inflammable ☐ safe

Please mark the appropriate warning hints.

Reason for return:

_____

_____

Company data:

company: _____ contact person: _____

_____ _____

_____ department: _____

address: _____ phone number: _____

_____ fax / e-mail: _____

_____ your order no.: _____

I hereby certify that the returned equipment has been cleaned and decontaminated acc. to good industrial practices and is in compliance with all regulations. This equipment poses no health or safety risks due to contamination.

_____ _____

(Date) (company stamp and legally binding signature)

Endress+Hauser

The Power of Know How

More information about services and repairs:
www.services.endress.com

Europe

Austria – Wien
❑ Endress+Hauser Ges.m.b.H.
Tel. (01) 88 05 60, Fax (01) 88 05 63 35

Belarus – Minsk
Belorgsintez
Tel. (017) 2 50 84 73, Fax (017) 2 50 85 83

Belgium / Luxembourg – Bruxelles
❑ Endress+Hauser S.A. / N.V.
Tel. (02) 2 48 06 00, Fax (02) 2 48 05 53

Bulgaria – Sofia
Intertech-Automation Ltd.
Tel. (02) 9 62 71 52, Fax (02) 9 62 14 71

Croatia – Zagreb
❑ Endress+Hauser GmbH+Co.
Tel. (01) 6 63 77 85, Fax (01) 6 63 78 23

Cyprus – Nicosia
I+G Electrical Services Co. Ltd.
Tel. (02) 48 47 88, Fax (02) 48 46 90

Czech Republic – Praha
❑ Endress+Hauser Czech s.r.o.
Tel. (02) 66 78 42 31, Fax (026) 66 78 41 79

Denmark – Søborg
❑ Endress+Hauser A/S
Tel. (70) 13 11 32, Fax (70) 13 21 33

Estonia – Tartu
Elvi-Aqua
Tel. (7) 30 27 32, Fax (7) 30 27 31

Finland – Helsinki
❑ Metso Endress+Hauser Oy
Tel. (204) 8 31 60, Fax (204) 8 31 61

France – Huningue
❑ Endress+Hauser S.A.
Tel. (389) 69 67 68, Fax (389) 69 48 02

Germany – Weil am Rhein
❑ Endress+Hauser Messtechnik GmbH+Co. KG
Tel. (07621) 9 75 01, Fax (07621) 97 55 55

Greece – Athens
I & G Building Services Automation S.A.
Tel. (01) 9 24 15 00, Fax (01) 9 22 17 14

Hungary – Budapest
❑ Endress+Hauser Magyarország
Tel. (01) 4 12 04 21, Fax (01) 4 12 04 24

Iceland – Reykjavik
Sindra-Stál hf
Tel. 5 75 00 00, Fax 5 75 00 10

Ireland – Clane / County Kildare
❑ Flomeaco Endress+Hauser Ltd.
Tel. (045) 86 86 15, Fax (045) 86 81 82

Italy – Cernusco s/N, Milano
❑ Endress+Hauser S.p.A.
Tel. (02) 92 19 21, Fax (02) 92 19 23 62

Latvia – Riga
Elekoms Ltd.
Tel. (07) 33 64 44, Fax (07) 33 64 48

Lithuania – Kaunas
UAB Agava Ltd.
Tel. (03) 7 20 24 10, Fax (03) 7 20 74 14

Netherlands – Naarden
❑ Endress+Hauser B.V.
Tel. (035) 6 95 86 11, Fax (035) 6 95 88 25

Norway – Lierskogen
❑ Endress+Hauser A/S
Tel. 32 85 98 50, Fax 32 85 98 51

Poland – Wroclaw
❑ Endress+Hauser Polska Sp. z o.o.
Tel. (071) 7 80 37 00, Fax (071) 7 80 37 60

Portugal – Cacem
❑ Endress+Hauser Lda.
Tel. (21) 4 26 72 90, Fax (21) 4 26 72 99

Romania – Bucharest
Romconseng S.R.L.
Tel. (01) 4 10 16 34, Fax (01) 4 11 25 01

Russia – Moscow
❑ Endress+Hauser GmbH+Co
Tel. (095) 1 58 75 64, Fax (095) 7 84 63 91

Slovak Republic – Bratislava
Transcom Technik s.r.o.
Tel. (2) 44 88 86 90, Fax (2) 44 88 71 12

Slovenia – Ljubljana
❑ Endress+Hauser (Slovenija) D.O.O.
Tel. (01) 5 19 22 17, Fax (01) 5 19 22 98

Spain – Sant Just Desvern
❑ Endress+Hauser S.A.
Tel. (93) 4 80 33 66, Fax (93) 4 73 38 39

Sweden – Sollentuna
❑ Endress+Hauser AB
Tel. (08) 55 51 16 00, Fax (08) 55 51 16 55

Switzerland – Reinach/BL 1
❑ Endress+Hauser Metso AG
Tel. (061) 7 15 75 75, Fax (061) 7 11 16 50

Turkey – Levent/Istanbul
Intek Endüstriyel Ölcü ve Kontrol Sistemleri
Tel. (0212) 2 75 13 55, Fax (0212) 2 66 27 75

Ukraine – Kiev
Photonika GmbH
Tel. (44) 2 68 81 02, Fax (44) 2 69 07 05

Great Britain – Manchester
❑ Endress+Hauser Ltd.
Tel. (0161) 2 86 50 00, Fax (0161) 9 98 18 41

Yugoslavia Republic – Beograd
Meris d.o.o.
Tel. (11) 4 44 29 66, Fax (11) 3 08 57 78

Africa

Algeria – Annaba
Symes Systemes et Mesures
Tel. (38) 88 30 03, Fax (38) 88 30 02

Egypt – Heliopolis/Cairo
Anasia Egypt For Trading (S.A.E.)
Tel. (02) 2 68 41 59, Fax (02) 2 68 41 69

Morocco – Casablanca
Oussama S.A.
Tel. (02) 22 24 13 38, Fax (02) 2 40 26 57

Rep. South Africa – Sandton
❑ Endress+Hauser (Pty.) Ltd.
Tel. (011) 2 62 80 00, Fax (011) 2 62 80 62

Tunisia – Tunis
CMR Controle, Maintenance et Regulation
Tel. (01) 79 30 77, Fax (01) 78 85 95

America

Argentina – Buenos Aires
❑ Endress+Hauser Argentina S.A.
Tel. (11) 45 22 79 70, Fax (11) 45 22 79 09

Brazil – Sao Paulo
❑ Samson Endress+Hauser Ltda.
Tel. (011) 50 31 34 55, Fax (011) 50 31 30 67

Canada – Burlington, Ontario
❑ Endress+Hauser (Canada) Ltd.
Tel. (905) 6 81 92 92, Fax (905) 6 81 94 44

Chile – Santiago de Chile
❑ Endress+Hauser (Chile) Ltd.
Tel. (02) 3 21 30 09, Fax (02) 3 21 30 25

Colombia – Bogota D.C.
Colsein Ltda.
Tel. (01) 2 36 76 59, Fax (01) 6 10 78 68

Costa Rica – San Jose
Euro-Tec (Costa Rica) S.A.
Tel. 2 20 28 08, Fax 2 96 15 42

Ecuador – Quito
Insetec Cia. Ltda.
Tel. (02) 2 26 91 48, Fax (02) 2 46 18 33

El Salvador – San Salvador
Automatizacion y Control Industrial de El Salvador, S.A. de C.V.
Tel. 2 84 31 51, Fax 2 74 92 48

Guatemala – Ciudad de Guatemala
Automatizacion y Control Industrial, S.A.
Tel. (03) 34 59 85, Fax (03) 32 74 31

Honduras – San Pedro Sula, Cortes
Automatizacion y Control Industrial de Honduras, S.A. de C.V.
Tel. 5 57 91 36, Fax 5 57 91 39

Mexico – México, D.F
❑ Endress+Hauser (México), S.A. de C.V.
Tel. (5) 5 55 68 24 07, Fax (5) 5 55 68 74 59

Nicaragua – Managua
Automatización y Control Industrial de Nicaragua, S.A.
Tel. 2 22 61 90, Fax 2 28 70 24

Peru – Lima
Process Control S.A.
Tel. (2) 61 05 15, Fax (2) 61 29 78

USA – Greenwood, Indiana
❑ Endress+Hauser Inc.
Tel. (317) 5 35 71 38, Fax (317) 5 35 84 98

USA – Norcross, Atlanta
❑ Endress+Hauser Systems & Gauging Inc.
Tel. (770) 4 47 92 02, Fax (770) 4 47 57 67

Venezuela – Caracas
Controval C.A.
Tel. (212) 9 44 09 66, Fax (212) 9 44 45 54

Asia

Azerbaijan – Baku
Modcon Systems
Tel. (12) 92 98 59, Fax (12) 92 98 59

Brunei – Negara Brunei Darussalam
American International Industries (B) Sdn. Bhd.
Tel. (3) 22 37 37, Fax (3) 22 54 58

Cambodia – Khan Daun Penh, Phom Penh
Comin Khmere Co. Ltd.
Tel. (23) 42 60 56, Fax (23) 42 66 22

China – Shanghai
❑ Endress+Hauser (Shanghai) Instrumentation Co. Ltd.
Tel. (021) 54 90 23 00, Fax (021) 54 90 23 03

China – Beijing
❑ Endress+Hauser (Beijing) Instrumentation Co. Ltd.
Tel. (010) 65 88 24 68, Fax (010) 65 88 17 25

Hong Kong – Tsimshatsui / Kowloon
❑ Endress+Hauser (H.K.) Ltd.
Tel. 8 52 25 28 31 20, Fax 8 52 28 65 41 71

India – Mumbai
❑ Endress+Hauser (India) Pvt. Ltd.
Tel. (022) 6 93 83 36, Fax (022) 6 93 83 30

Indonesia – Jakarta
PT Grama Bazita
Tel. (21) 7 95 50 83, Fax (21) 7 97 50 89

Iran – Tehran
Patsa Industry
Tel. (021) 8 72 68 69, Fax (021) 8 71 96 66

Israel – Netanya
Instrumetrics Industrial Control Ltd.
Tel. (09) 8 35 70 90, Fax (09) 8 35 06 19

Japan – Tokyo
❑ Sakura Endress Co. Ltd.
Tel. (0422) 54 06 11, Fax (0422) 55 02 75

Jordan – Amman
A.P. Parpas Engineering S.A.
Tel. (06) 5 53 92 83, Fax (06) 5 53 92 05

Kazakhstan – Almaty
BEI Electro
Tel. (72) 30 00 28, Fax (72) 50 71 30

Saudi Arabia – Jeddah
Anasia Industrial Agencies
Tel. (02) 6 53 36 61, Fax (02) 6 53 35 04

Kuwait – Safat
United Technical Services Est. For General Trading
Tel. 2 41 12 63, Fax 2 41 15 93

Lebanon – Jbeil Main Entry
Network Engineering
Tel. (3) 94 40 80, Fax (9) 54 80 38

Malaysia – Shah Alam, Selangor Darul Ehsan
❑ Endress+Hauser (M) Sdn. Bhd.
Tel. (03) 78 46 48 48, Fax (03) 78 46 88 00

Pakistan – Karachi
Speedy Automation
Tel. (021) 7 72 29 53, Fax (021) 7 73 68 84

Philippines – Pasig City, Metro Manila
❑ Endress+Hauser (Phillipines) Inc.
Tel. (2) 6 38 18 71, Fax (2) 6 38 80 42

Singapore – Singapore
❑ Endress+Hauser (S.E.A.) Pte. Ltd.
Tel. (65) 66 82 22, Fax (65) 66 68 48

Korea, South – Seoul
❑ Endress+Hauser (Korea) Co. Ltd.
Tel. (02) 6 58 72 00, Fax (02) 6 59 28 38

Sultanate of Oman – Ruwi
Mustafa & Sultan Sience & Industry Co. L.L.C.
Tel. 63 60 00, Fax 60 70 66

Taiwan – Taipei
Kingjarl Corporation
Tel. (02) 27 18 39 38, Fax (02) 27 13 41 90

Thailand – Bangkok 10210
❑ Endress+Hauser (Thailand) Ltd.
Tel. (2) 9 96 78 11-20, Fax (2) 9 96 78 10

United Arab Emirates – Dubai
Descon Trading L.L.C.
Tel. (04) 2 65 36 51, Fax (04) 2 65 32 64

Uzbekistan – Tashkent
Im Mexatronika-Tes
Tel. (71) 1 91 77 07, Fax (71) 1 91 76 94

Vietnam – Ho Chi Minh City
Tan Viet Bao Co. Ltd.
Tel. (08) 8 33 52 25, Fax (08) 8 33 52 27

Australia + New Zealand

Australia – Sydney, N.S.W.
❑ Endress+Hauser (Australia) Pty. Ltd.
Tel. (02) 88 77 70 00, Fax (02) 88 77 70 99

New Zealand – Auckland
EMC Industrial Group Ltd.
Tel. (09) 4 15 51 10, Fax (09) 4 15 51 15

All other countries

❑ Endress+Hauser GmbH+Co. KG
Instruments International
Weil am Rhein, Germany
Tel. (07621) 9 75 02, Fax (07621) 97 53 45

http://www.endress.com

Endress+Hauser
The Power of Know How

❑ Members of the Endress+Hauser group

09.02

BA 172C/07/en/01.03
Printed in Germany / FM+SGML 6.0 / DT

50088307