BA 144C/07/en/07.00
No. 51501096
Software Version 2.00 or higher

Mycom CLM 152 Conductivity Measuring Transmitter

Operating Instructions

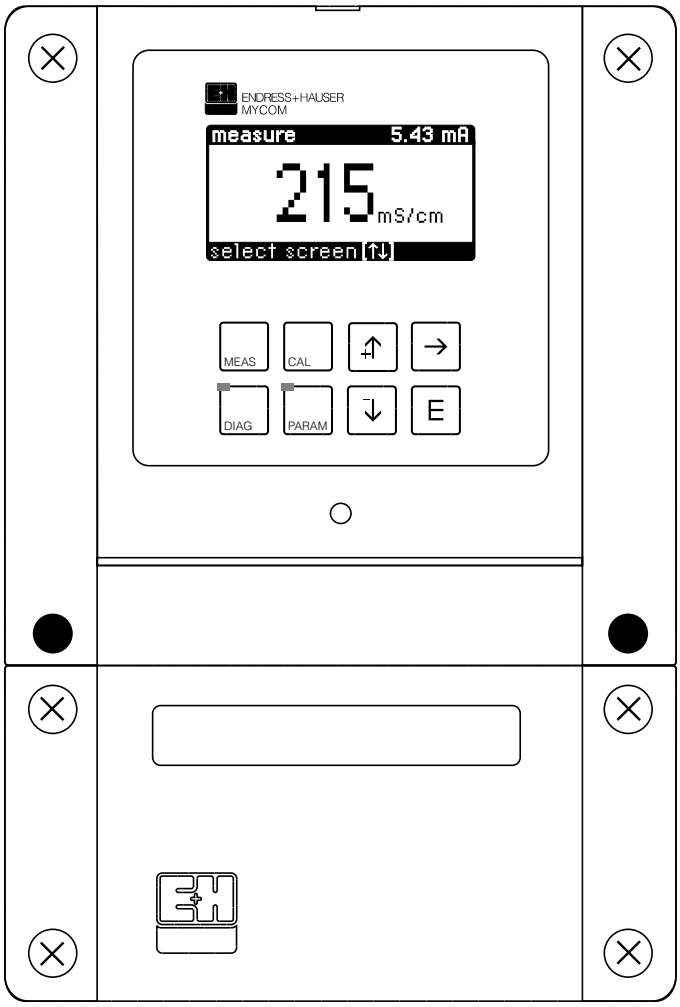

Endress+Hauser

The Power of Know How

You want to familiarise yourself with the instrument.
All you need to know can be found in these chapters.

You want to install and start up the instrument.
All the necessary steps are described in these chapters.

You want to operate or reconfigure the instrument.
The operating concept is explained in these chapters.

When you encounter problems or when the instrument requires maintenance, refer to these chapters for help.

Table of contents

1 General information

1.1 Symbols used

Warning!

This symbol draws attention to dangers. Failure to follow the instructions may lead to serious injury or damage to equipment.

Caution!

This symbol draws attention to possible faults caused by operator error.

Note!

This symbol draws attention to important items of information.

1.2 Conformity certificate

The Mycom CLM 152 conductivity measuring transformer was developed and manufactured in compliance with European standards and directives.

Note:

An EC Declaration of Conformity can be obtained from Endress+Hauser.

2 Safety

2.1 Intended application

The Mycom CLM 152 measuring transmitter is a microprocessor-controlled measuring and control instrument used to determine and evaluate specific conductivity. Since it has been designed to permit extensive programming and the addition of optional plug-in modules, it can be adapted to different process applications. If the version of the Mycom CLM 152 with explosion protection is chosen, it can be operated in explosive atmospheres as well.

2.2 General safety instructions

Warning:

Operating this instrument in any way other than described in these instructions may compromise the safety and function of the measuring system and is therefore not allowed.

Installation, start-up, operation

The Mycom CLM 152 instrument has been designed and manufactured for safe operation according to the latest state of the art and conforms to the prevailing regulations and EC directives, see “Technical data”. However, if used improperly or other than for the intended purpose, it may be hazardous, e.g. due to improper connection.

Installation, electrical connection, start-up, operation and maintenance of the measuring system must therefore be performed exclusively by trained specialist personnel properly authorised by the system operator for such work. The specialist personnel must be familiar with these operating instructions and must adhere to the instructions contained in this document.

2.3 Safety functions

Access authorisation:

Unauthorised access to the calibration and configuration data of the transmitter is effectively prevented by access codes.

Alarm functions:

The fault contact is activated in case of system faults, temperature sensor failure and serious defects.
The alarm contact is designed as a fail-safe circuit, i.e. the alarm is activated immediately in case of power failure.

Data integrity:

The set configuration is maintained even in the event of a power failure.

Electromagnetic compatibility:

The instrument is protected against interference, such as pulse-shaped transients, high frequency and electrostatic discharges in accordance with the prevailing European standards.
This is, however, only the case for instruments connected as described in these installation and operating instructions.

3 Instrument description

3.1 Applications

The Mycom CLM 152 measuring transmitter is specially designed for carrying out measuring and control tasks in the following applications:

- Foodstuffs industry
- Pharmaceuticals
- Chemical process engineering
- Water treatment
- Drinking water
- Monitoring ultra-pure water

3.2 Operating principle

Inductance principle

In inductive conductivity measurement, a transmitter coil generates a continuous alternating magnetic field that induces an electric voltage in a liquid.
A current flows due to the ions present in the liquid. The current increases as the ion concentration rises. The ion concentration acts as a measure of conductivity. The current in the liquid generates an alternating magnetic field in the receiving coil.
The resulting current induced in the receiving coil is processed in the measuring instrument and is output as a conductivity value.

The advantage of this set-up is the fault-free measurement in liquids that have a tendency to sediment; there is no electrically conductive connection between the sensor and the liquid and there is no polarisation since there are no electrodes.

Conductance principle

When ions are subjected to an electrical field, and depending on their electrolytic excess carrier, they either become cations and migrate to a positively charged electrode, or they become anions and migrate to a negatively charged electrode. The migration speed of the ions is directly proportional to the current strength recorded in the measuring instrument as a conductivity value.

Polarisation compensation (conductive)

Polarisation effects in the boundary layer between the electrode and the measuring solution limit the measuring range of conductive sensors. The Mycom CLM 152 measuring transmitter can detect and compensate for polarisation effects using an innovative, intelligent signal evaluation process. This results in a significant expansion of the useful measuring range of a sensor (cf. Overview of Conductivity Sensors).

3.3 Measuring functions

Concentration measurement

In this operating mode, the instrument stores the data for NaOH, HNO_3, H_2SO_4 and H_3PO_4. The operator can enter and store the individual data for four other substances within the permitted ranges, and, if required, can activate them as a concentration measuring range. See Chapter 7.1.1 “Measured variable”.

Differential measurement (if equipped with two measuring channels)

Two sensors are used at different points in a process, e.g. to monitor heat exchangers (upstream and downstream of the exchanger) in media separation or mixture control applications. The difference between the two measuring results is used to control the process.

Measuring range switch-over

The instrument can store the following settings for four measuring ranges:

- Measuring range allocation for current output (0/4 and 20 mA)
- Setpoint and hysteresis for existing limit contacts.
- Temperature coefficients
- Type of temperature compensation

Switch-over takes place by internal configuring the internal trigger thresholds or alternative external by wiring the binary inputs (add-on module FCXI required).

3.4 Measuring system

A typical measuring system consists of the following components:

- an inductive or conductive conductivity sensor with an integrated temperature sensor Pt 100
- a suitable conductivity measuring cable with or without junction box for extending the cable
- the Mycom CLM 152 measuring transmitter
- Ex-version transmitter:
  conductive: combinable with all conductivity sensors
  inductive: only combinable with CLS 50

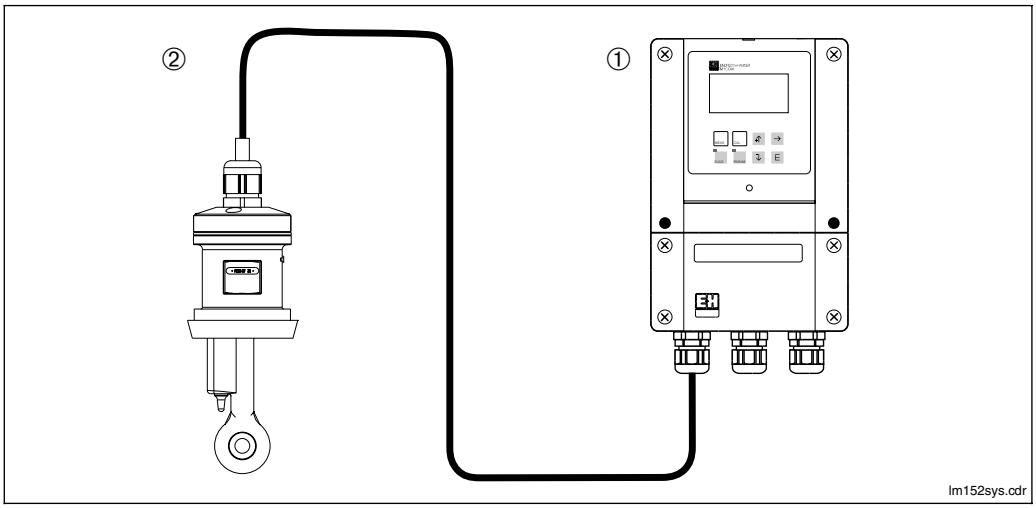

Fig. 3.1 Example of a complete inductive measuring system
Mycom CLM 152,
, Conductivity sensor e.g. CLS 52

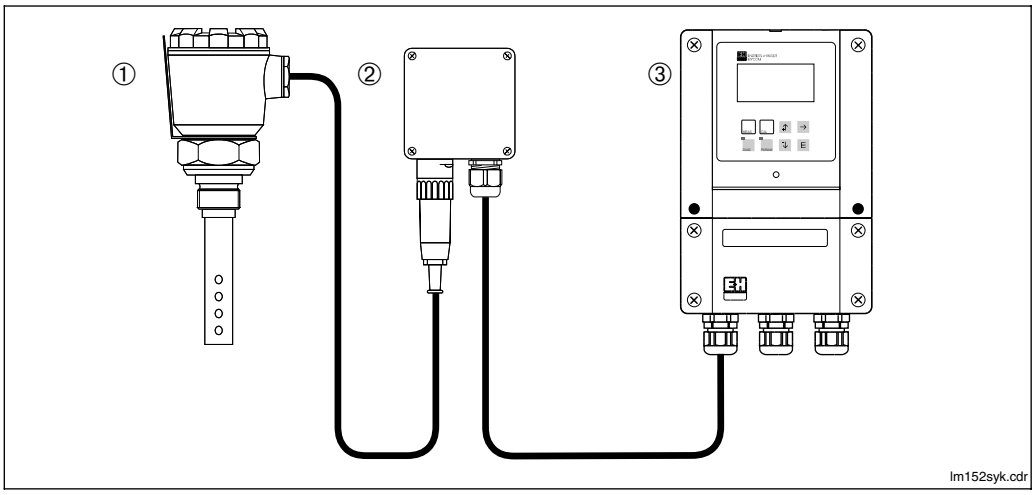

Fig. 3.2 Example of a complete conductive measuring system
① Conductivity sensor, e.g. CLS 12
② VS junction box (variant)
③ Mycom CLM 152

3.5 Major features

- Backlit graphical display, 128 x 64 pixels
- Menu-driven plain text navigation
- Full-function, clearly arranged programming options
- Access to configuration and calibration functions protected by user-defined codes
- Modular design with plug-in modules, permitting two measuring inputs, current input with measuring transmitter power supply, two active current outputs, 0 / 4 to 20 mA, up to five contact outputs and PROFIBUS® communication

Note

Only the manufacturer or the Endress+Hauser Service Organisation can expand the instrument with new or replacement plug-in modules (see back page of this manual).

3.6 Instrument variants

You can identify the instrument variant and the required power supply from the order code on the nameplate.

CLM 152 conductivity and resistance measuring transmitter

Field housing, ingress protection IP 65, for wall mounting
Signal outputs 0 / 4 ... 20 mA for conductivity / resistance and temperature, 2 output contacts

Equipment and certificate

1-circuit version for non-hazardous areas
A1A Basic version
A1B 3 relays (Chemoclean)
A1C feedback/hold contact / remote MR switching
A1D 3 relays / feedback/hold contact (Autoclean) / remote MR switching
A1E PROFIBUS®
A1F 3 relays (Chemoclean), PROFIBUS®
A1G feedback/hold contact / remote MR switching, PROFIBUS®
A1H 3 relays / feedback/hold contact (Autoclean) / remote MR switching, PROFIBUS®

2-circuit version for non-hazardous areas
A2A Basic version
A2B 3 relays (Chemoclean)
A2C feedback/hold contact / remote MR switching
A2D 3 relays / feedback/hold contact (Autoclean) / remote MR switching
A2E PROFIBUS®
A2F 3 relays (Chemoclean), PROFIBUS®
A2G feedback/hold contact / remote MR switching, PROFIBUS®

1-circuit version for Ex areas (CENELEC)
Z1A Basic version, EEx em [ia/ib] IIC T4
Z1B 3 optocouplers (Chemoclean), EEx em [ia/ib] IIC T4
Z1C feedback/hold contact / remote MR switching, EEx em [ia/ib] IIC T4
Z1D 3 optocouplers / feedback/hold contact (Autoclean) / remote MR switching, EEx em [ia/ib] IIC T4
Z1E PROFIBUS®, EEx em [ia/ib] IIC T4
Z1F 3 optocouplers (Chemoclean), PROFIBUS®, EEx em [ia/ib] IIC T4
Z1G feedback/hold contact / remote MR switching, PROFIBUS®, EEx em [ia/ib] IIC T4

2-circuit version for Ex areas (CENELEC)
Z2A Basic version, EEx em [ia/ib] IIC T4
Z2B 3 optocouplers (Chemoclean), EEx em [ia/ib] IIC T4
Z2C feedback/hold contact / remote MR switching, EEx em [ia/ib] IIC T4
Z2E PROFIBUS®, EEx em [ia/ib] IIC T4

1-circuit version for Ex areas (CSA)
C1A Basic version, NI with IS outputs Cl. I-III Div. 2, Group A-G
C1B 3 optocouplers (Chemoclean), NI with IS outputs Cl. I-III Div. 2, Group A-G
C1D 3 optocouplers / feedback/hold contact (Autoclean), remote MR switching, NI with IS outputs Cl. I-III Div. 2, Group A-G
C1G feedback/hold contact / remote MR switching, PROFIBUS®, NI with IS outputs Cl. I-III Div. 2, Group A-G

2-circuit version for Ex areas (CSA)
C2B 3 optocouplers (Chemoclean), NI with IS outputs Cl. I-III Div. 2, Group A-G

1-circuit version for Ex areas (FM)
F1A Basic version, NI outputs Cl. I Div. 2, Cl. II/III Div. 1, Cl. I Zone 2
F1B 3 optocouplers (Chemoclean), NI outputs Cl. I Div. 2, Cl. II/III Div. 1, Cl. I Zone 2
F1D 3 optocouplers / feedback/hold contact (Autoclean), remote MR switching, NI outputs Cl. I Div. 2, Cl. II/III Div. 1, Cl. I Zone 2
F1G feedback/hold contact / remote MR switching, PROFIBUS®, NI outputs Cl. I Div. 2, Cl. II/III Div. 1, Cl. I Zone 2

2-circuit version for Ex areas (FM)
F2B 3 optocouplers (Chemoclean), NI outputs Cl. I Div. 2, Cl. II/III Div. 1, Cl. I Zone 2

1-circuit version for Ex areas (FM AIS)
G1A Basic version, AIS NI Cl. I-III Div. 1&2, Group A-G
G1B 3 optocouplers (Chemoclean), AIS NI Cl. I-III Div. 1&2, Group A-G
G1D 3 optocouplers / feedback/hold contact (Autoclean), remote MR switching, AIS NI Cl. I-III Div. 1&2, Group A-G
G1G feedback/hold contact, remote MR switching, PROFIBUS® AIS NI Cl. I-III Div. 1&2, Group A-G

2-circuit version for Ex areas (FM AIS)
G2B 3 optocouplers (Chemoclean), AIS NI Cl. I-III Div. 1&2, Group A-G

(p.t.o.)

(Equipment and certificate, see above)

Power supply
0 230 V, 50 / 60 Hz
1 115 V, 50 / 60 Hz
2 200 V, 50 / 60 Hz
3 24 V, 50 / 60 Hz
5 100 V, 50 / 60 Hz
8 24 V DC

Language
A D, E, F, I switchable
C D, E, F, NL, J switchable

Measuring method / equipment
10 conductive
15 inductive
20 conductive with moisture protection lacquering
25 inductive with moisture protection lacquering
30 Pg cable glands, conductive and inductive (not C, F, G certificate)
31 NPT ½" cable entry, conductive and inductive (not Z certificate)
40 Pg cable glands, conductive and inductive with moisture protection (not C, F, G certificates)
41 NPT ½" cable entry, conductive and inductive (not Z certificates)

Attachment
A without additional attachment
B post mounting kit

CLM 152- [ ][ ][ ][ ][ ] complete order code

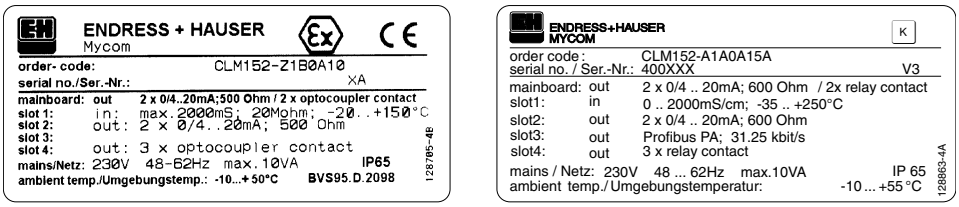

Fig. 3.3 Mycom nameplate CLM 152-Z. Ex (left) CLM 152 (right)

3.7 Accessories

3.7.1 Supplied accessories

The following accessories are supplied with the package:

- 2 cable glands Pg 13.5
- Kit for panel and post mounting (only mounting version B)
- 1 measuring point label with 2 nails

Overview of connectable Endress+Hauser conductivity sensors

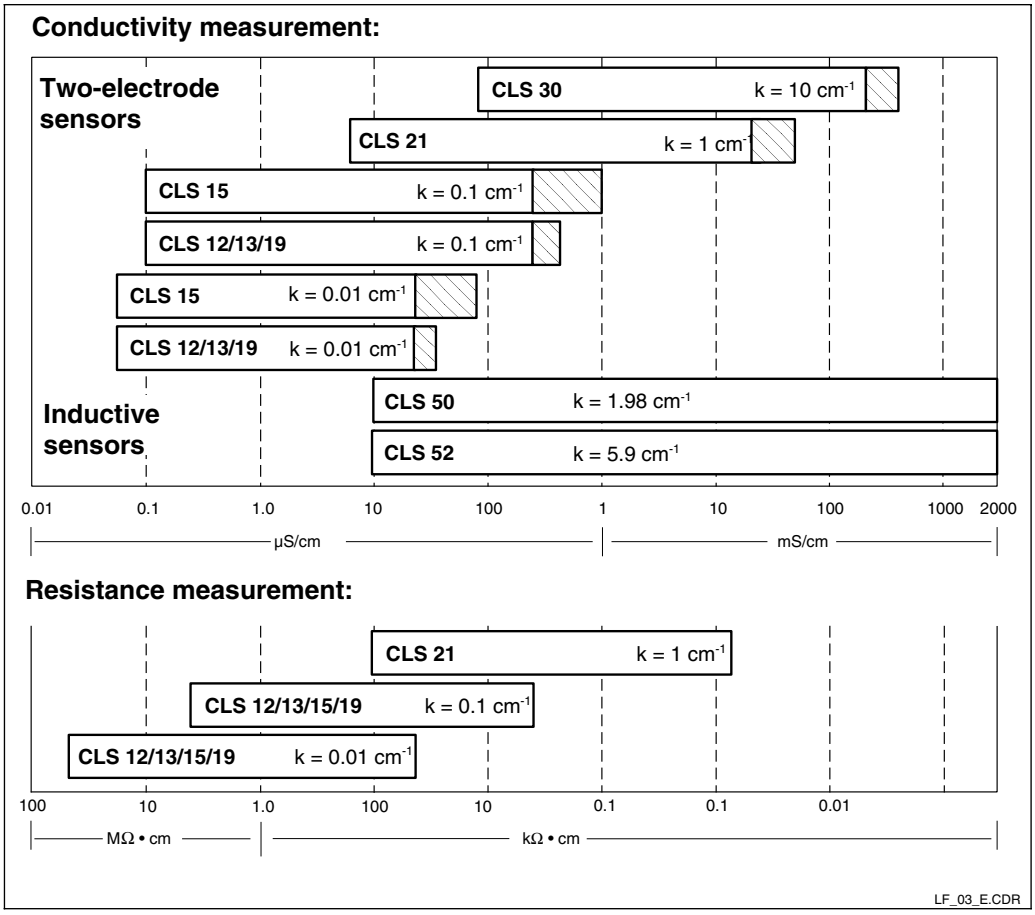

Conductivity sensors from Endress+Hauser

specified application

extended measuring range through polarisation compensation

Fig. 3.4

3.7.2 Calibration solutions

Type	Conductivity at 25 °C 1)	Order number
CLY 11-A	74.0 µS	50081902
CLY 11-B	149.6 µS	50081903
CLY 11-C	1.406 mS	50081904
CLY 11-D	12.64 mS	50081905
CLY 11-E	107.00 mS	50081906

1) The values may deviate due to manufacturing tolerances. Precision applies to value specified on the bottle.

Precision calibration solutions for conductivity, accuracy ± 0.5% at 25°C, bottle with capacity of 500 ml.

3.7.3 VBM junction box for inductive sensors

The VBM junction box must be installed to extend the connecting cable of the CLS 52/CLS 50 sensor beyond the standard cable length by means of a special cable to the measuring transmitter.

The VBM junction box is supplied with
2 Pg 13.5 glands for cable entry and
10 high-impedance insulated screw terminals for connecting single wires.
Material: painted aluminium
Degree of protection: IP 65
Order No.: 5000398
Ex Zone 1 Order No.: 50003991

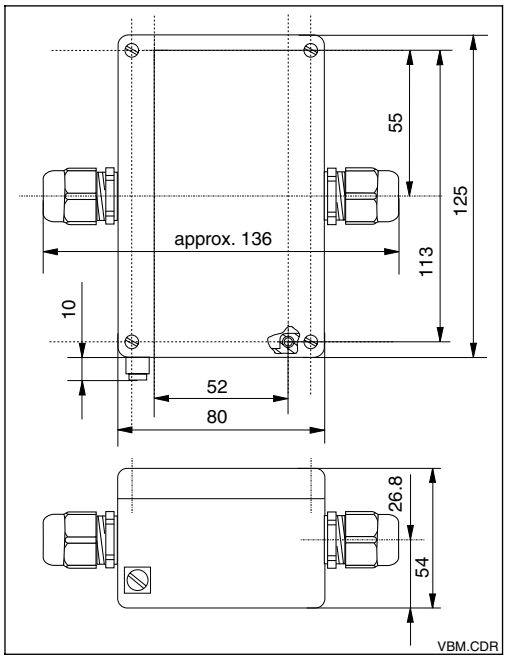

Fig. 3.5 Dimensions of VBM junction box

3.7.4 VS junction box for conductive sensors

Junction box with cable union and receptacle including SXP 7-pin plug for connection between sensor and connecting cable to measuring transmitter; Material: plastic; degree of protection: IP 65;
Order No.: 50001054

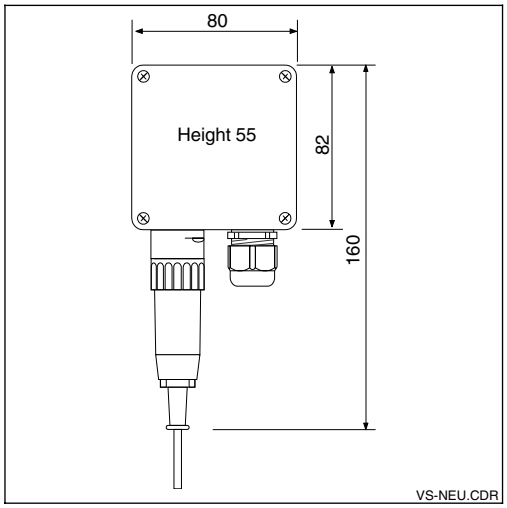

Fig. 3.6 Dimensions of VS junction box

3.7.5 CLK 5 sensor cable

Special cable for extending sensor cable for inductive sensors up to total length of max. 55 m;
Order No.: 50085473

3.7.6 CYK 71 sensor cable

Special cable for extending sensor cable for conductive sensors.	Non-Ex	Order No.:	50085333
	Ex Zone	Order No.:	50085673

4 Installation

4.1 Storage and transport

The packaging material used to store and transport the instrument must provide shock and moisture protection. The original packaging materials provide the most effective protection. The ambient conditions must also meet the requirements (see Technical data).

4.2 Unpacking

Make sure the contents are undamaged. The post office or the freight carrier must be informed of any damage and the supplier must be notified.

Check the scope of delivery against your purchase order and the shipping documents:

- Scope of delivery
- Instrument model and version as specified on nameplate (see Fig. 3.3)
- Accessories (see Chapter 3.7)
- Operating instructions

Keep the original packaging materials in case the instrument has to be stored or shipped at a later date.

If you have any questions, please contact your supplier or the Endress+Hauser sales agency (see rear page of this document).

4.3 Installation

Wall installation (mounting versions A and B)

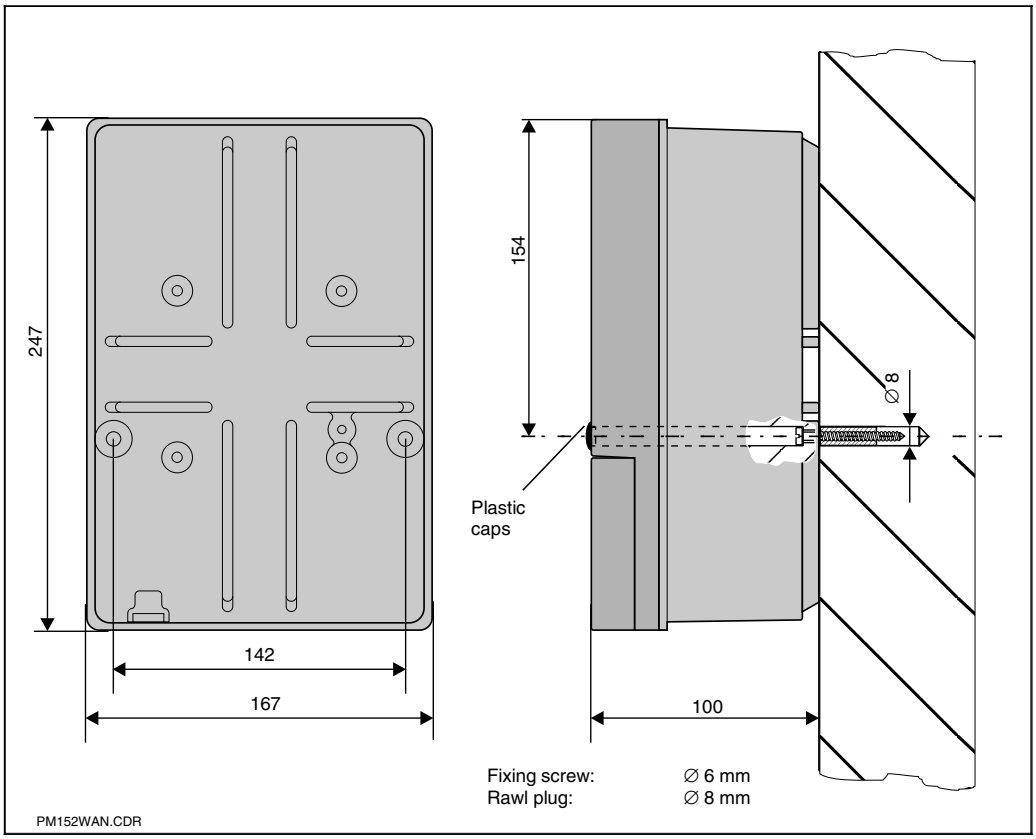

Fig. 4.1 Dimensions for wall mounting

Insert the screws in the attachment holes of the instrument and mount the instrument as depicted in Figure 4.1.

The holes are covered with plastic caps.

Post and panel mounting (mounting version B)

Attach the parts of the mounting kit supplied with mounting version B to the housing rear as depicted in Fig. 4.5:

Cut-out required:	$161^{+0,5}$ x $241^{+0,5}$ mm
Installation depth:	134 mm
Pipe diameter:	max. 70 mm

Caution:

You must use the CYY 101 weather protection cover for installation outdoors (see Mounting accessories)

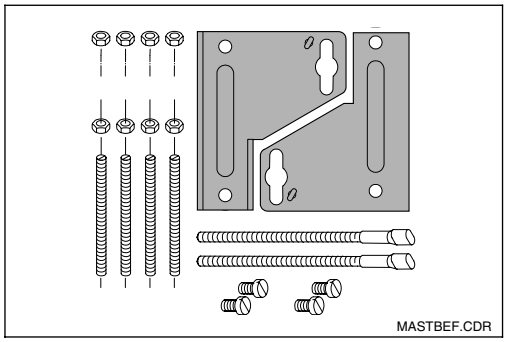

Fig. 4.5 Mounting kit for panel mounting and post mounting (Order No. 50061357)

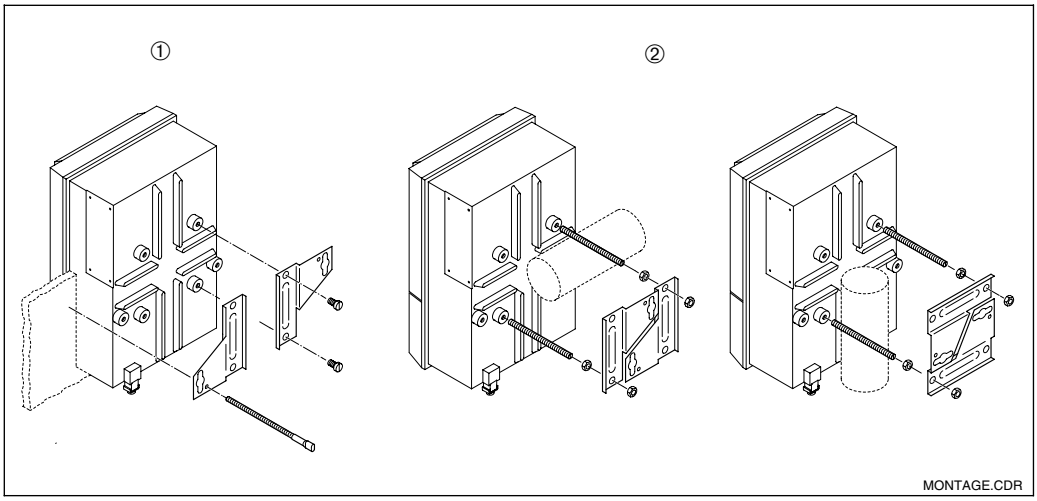

Fig. 4.2 Panel mounting ① and post mounting ② Mycom CLM 152

Mounting accessories

CYY 101 weather protection cover for operating the Mycom CLM 152 outdoors. The post mounting kit for the weather protection cover is also required for installing on vertical or horizontal pipes (Fig. 4.5).
Material: stainless steel
Order No. CYY101-A

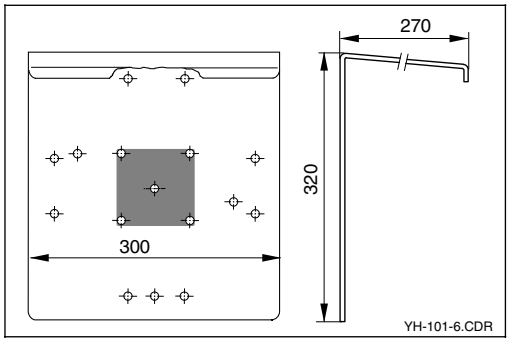

Fig. 4.3 Weather protection cover

Round post mounting kit for CYY 101 weather protection cover for attachment to vertical or horizontal pipes with diameters up to 70 mm.
Material: stainless steel
Order No. 50062121

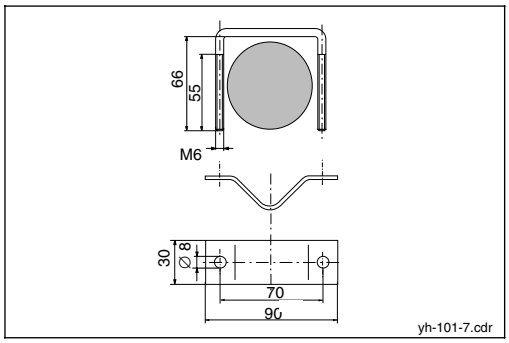

Fig. 4.4 CYY 101 round post attachment for weather protection cover

4.4 Electrical connection of the Mycom CLM 152

Warning:

- Only properly trained personnel is allowed to work on the instrument when the system is live and connected to the mains.
- A mains disconnecting device must be installed near the instrument and must be identified as the mains disconnection device for the Mycom CLM 152 (see EN 61010-1).
- Do not start the instrument without a protective earth connection!
- Before plugging the instrument to the mains, make sure that the mains voltage is the same as the voltage rating on the nameplate!

Warning:

All signal-carrying lines must be screened in compliance with VDE 0165 and routed separately other control lines.

Note:

- Immunity to interference can only be ensured if the screen earth is kept as short as possible.
  Do not solder an extension to the screen!
- If the instrument is mounted on a post, we recommend earthing the post as well.

Instrument connections

- Remove the four screws in the bottom third of the housing front panel.
- Remove the terminal compartment cover.
- You will find a wiring diagram and information on the instrument-specific module configuration folded up in the cover.
- Replace the dummy plugs in the housing base with the correct size and number of Pg cable glands.
- Feed the cable through the Pg cable glands into the terminal compartment .
- Connect the wires as specified in the wiring diagrams depicted on the following pages.
- Tighten the Pg cable glands to ensure the proper strain relief.

Warning:

In the non-hazardous area, the contact outputs can also be connected to the instrument's power supply.

First break out the section in the partition wall of the terminal compartment cover using a pair of pliers.

Then connect the right and left-hand parts of the terminal compartment by carefully fixing the cable in the cable ties provided without coiling the cable.

4.4.1 Connecting the Mycom CLM 152 in non-hazardous area

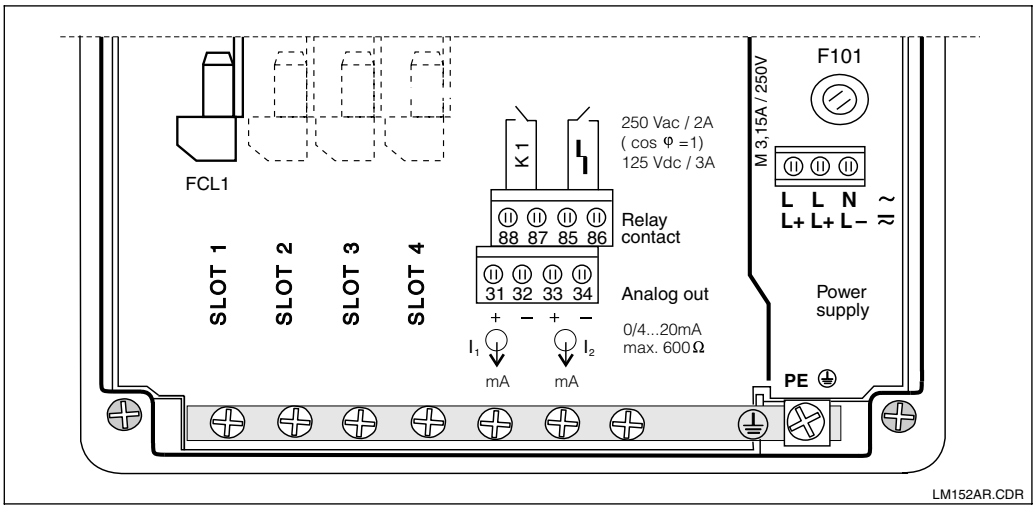

Fig. 4.6 Wiring compartment of Mycom CLM 152 non-Ex (base version)

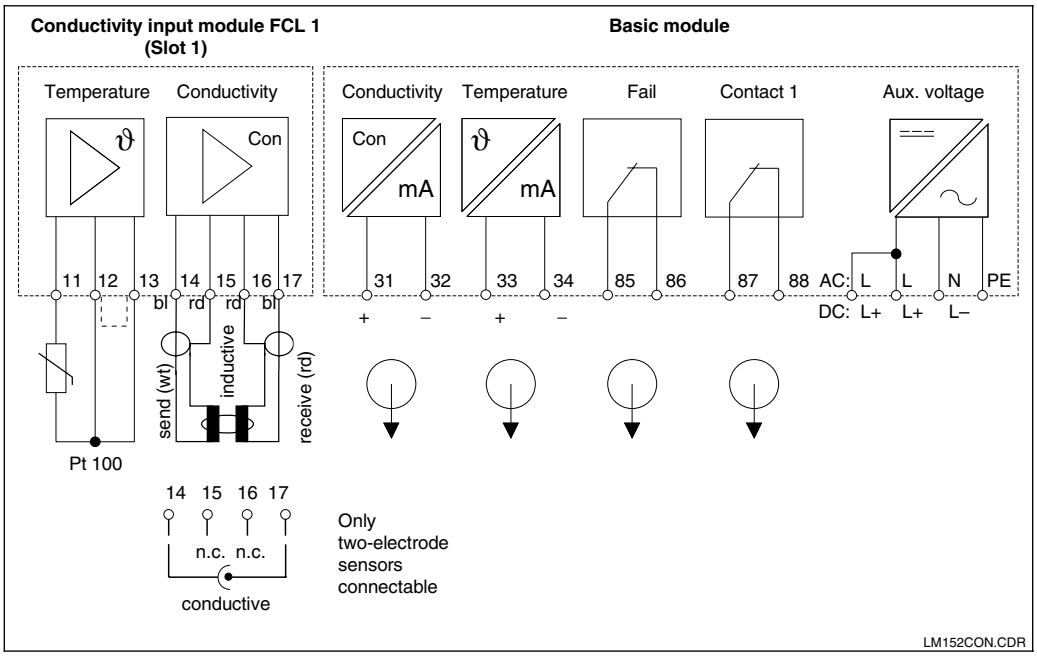

Fig. 4.7 Wiring diagram of Mycom CLM 152 (base version)

FCL1 module (Slot 1, basic configuration):

11	Pt 100 terminal, sensor line
12	Pt 100 terminal, sensor line
13	Cable compensation terminal

Inductive sensor

14	Transmitter coil inner conductor
15	Transmitter coil screen
16	Receiver coil screen
17	Receiver coil inner conductor

Conductive sensor

14	Electrode cable screen
15	not connected
16	not connected
17	Electrode cable inner conductor

Terminal blocks (basic configuration):

Power supply:

L/L+	AC voltage, phase or DC +
N/L–	AC voltage, neutral or DC –
PE	Protective earth

Active current output:

31	Current output (Cd signal) positive
32	Current output (Cd signal) negative
33	Current output (temp. signal) positive
34	Current output (Temp. signal) negative

Output contacts:

85	Alarm contact
86	Alarm contact
87	Contact 1
88	Contact 1

Note:

- The contact position on mains failure or when a fault occurs can be set for “contact 1" and ”alarm contact” through the system configuration.

Note

- All switching contacts are interference-suppressed. External loads must also be interference-suppressed.

FCL1 additional module:

For second conductivity input.

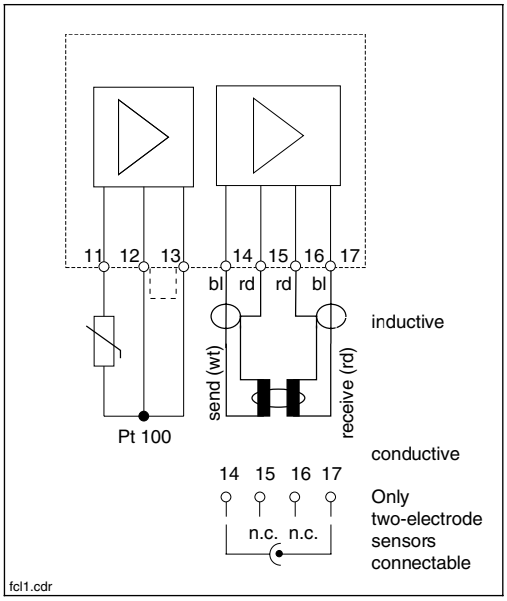

Fig. 4.8 Connection of FCL1 module

11 Pt 100 terminal, sensor line
12 Pt 100 terminal, sensor line
13 Cable compensation terminal

For inductive sensor
14 Transmitter coil inner conductor
15 Transmitter coil screen
16 Receiver coil screen
17 Receiver coil inner conductor

For conductive sensor
14 Electrode cable screen
15 not connected
16 not connected
17 Electrode cable inner conductor

Measuring channel allocation
Cond.1 / temperature 1 Slot 1
Cond.2 / temperature 2 Slot 2

FCYK additional module:

Comprising 3 relays for limit contactor or Chemoclean

89 Contact 2
90 Contact 2

91 Contact 3
92 Contact 3

93 Contact 4
94 Contact 4

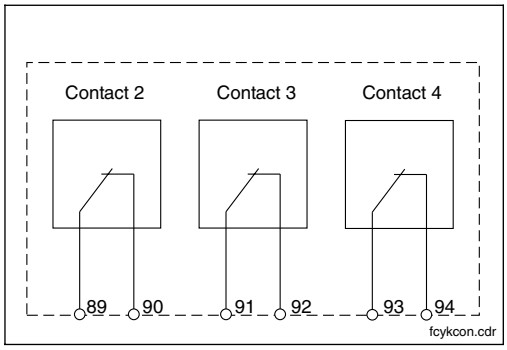

Fig. 4.9 Connection of FCYK module, non-Ex

FCXI additional module:

Comprising two binary input contacts for Hold and remote measuring range switch-over, and an analogue input with power supply for transmitter

21 Current input, positive
22 Current input, negative

81 Contact input 1
82 Contact input 1

83 Contact input 2
84 Contact input 2

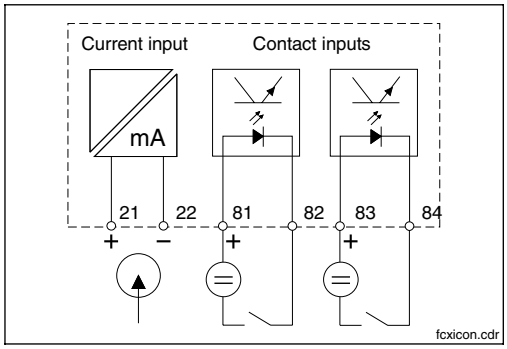

Fig. 4.10 Connection of FCXI module

Terminal for use of internal auxiliary voltage

If the analogue input of the FCXI module is not used, the internal measuring transmitter power supply is used to power the contact inputs.

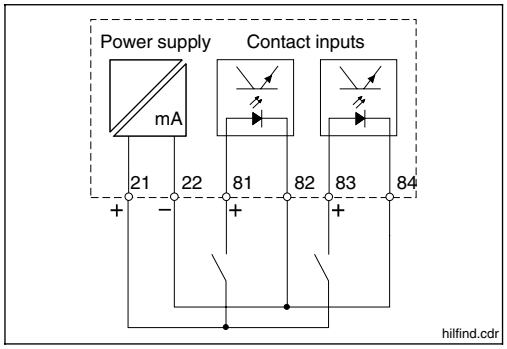

Fig. 4.11 Connection of FCXI module as internal aux. voltage

Technical data

if external power supply used:

Contact inputs (terminals 81 – 84)	passive, power supply required
Terminal voltage	max. 30 V, nominal 12 V

Internal aux. voltage (terminals 21/22)

Current drain	nominal ≈ 2 mA
Isolating voltage	electrical isolation max. 276 V_{rms}
Power voltage	20 V at 30 mA

FCYP additional module

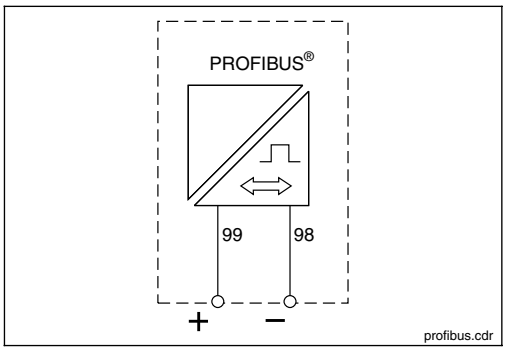

Fig. 4.12 Connection of FCYP module

PROFIBUS-PA digital port:

98 PA–
99 PA+

For more information, see Chapter 10

4.4.2 Connecting the Mycom CLM 152-Z in Ex zone

General instructions on Installation in hazardous areas

Instruments with the letter Z in their model designation are produced and tested in compliance with the harmonised European standards (CENELEC) for “Electrical equipment for hazardous areas”. A copy of the conformity certificates issued by DMT is enclosed with this instruction manual.

Instruments with version »C« have the canadian Ex approval acc. CSA.
Instruments withh version »F« have the US-american Ex approval acc. FM.

There are detailed standards covering both production and operation in Germany, including:

- “Ordinance on electrical systems in hazardous areas” (Elex V)
  Make sure you comply with DIN VDE 0165 when installing your equipment! Make sure you comply with Elex V § 9 when you repair or modify electrical equipment!
- “Ordinance on flammable liquids” (VbF)
- “Equipment Safety Act” (GSG)
- “Explosion guidelines of Professional Association for the Chemical Industry” (EX-RL)
- “Accidenti prevention regulations (UVV): Electrical systems and equipment”

The Mycom CLM 152-Z measuring transmitter built in compliance with Ex regulations may be installed in Zones 1 and 2.

Conductive conductivity sensors from Endress+Hauser can be operated in Zone 1 without a special permit. Other equipment may only be connected to the Mycom measuring transmitter in Ex version (Z series) if the equipment has an intrinsically safe electrical input circuit.
The CLS 50 inductive sensor has a system permit with CLM 152

Warning:

- The display cover must be closed when the instrument runs in continuous duty.
- The connection compartment cover may only be opened when the mains supply is switched off.

Note:

Helpful information on installing and operating electrical equipment in hazardous areas are contained in the Endress+Hauser Basic Information brochure GI 003/11/e, “Explosion protection of electrical equipment and systems”.
You can obtain this brochure from any Endress+Hauser sales office.

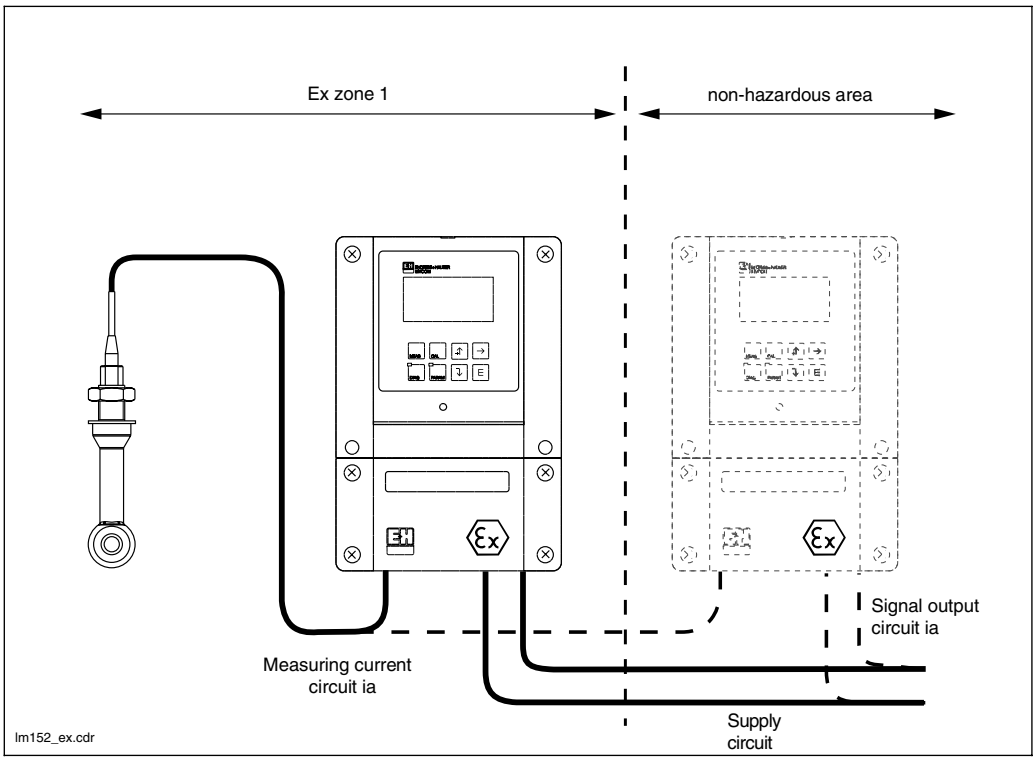

Fig. 4.13 Inductive sensor and measuring transmitter in Ex zone

Wiring compartment and wiring diagram

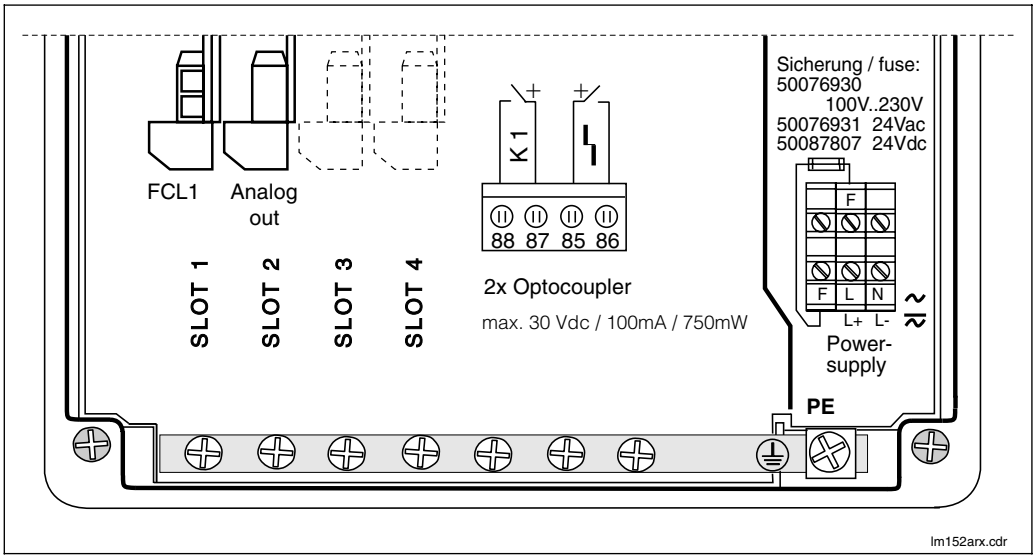

Fig. 4.14 Wiring compartment of Mycom CLM 152-Z (Ex)

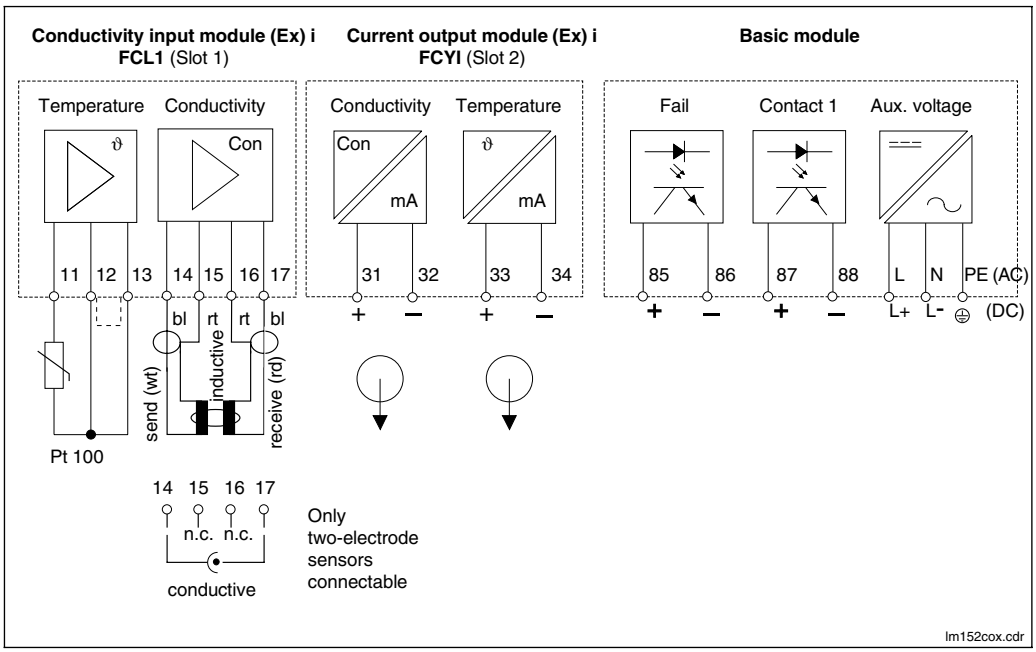

Fig. 4.15 Wiring diagram for CLM 152-Z (base version)

FCL1 module (slot 1, basic configuration):

11 Pt 100 terminal, sensor line
12 Pt 100 terminal, sensor line
13 Cable compensation terminal

For inductive sensor
14 Transmitter coil inner conductor
15 Transmitter coil screen
16 Receiver coil screen
17 Receiver coil inner conductor

For conductive sensor
14 Electrode cable screen
15 not connected
16 not connected
17 Electrode cable inner conductor

Connection data for power circuits, terminals 11 to 17:
$C_{a,max}$ = 50 nF
$L_{a,max}$ = 100 µH

FCYI module (slot 2, basic configuration):

Active current output:
31 Current output (Cd signal) positive
32 Current output (Cd signal) negative
33 Current output (temp. signal) positive
34 Current output (temp. signal) negative

Connection data for power circuits, terminals 31 to 34:
U_{max} = 16.4 V I_{max} = 65 mA
P_{max} = 1.1 W
$C_{a,max}$ = 40 nF $L_{a,max}$ = 100 µH

Terminal blocks (basic configuration):

Power supply:
L AC voltage, phase
N AC voltage, neutral
PE Protective earth

Output contacts:
85 Alarm contact +
86 Alarm contact –
87 Contact 1 +
88 Contact 1 –

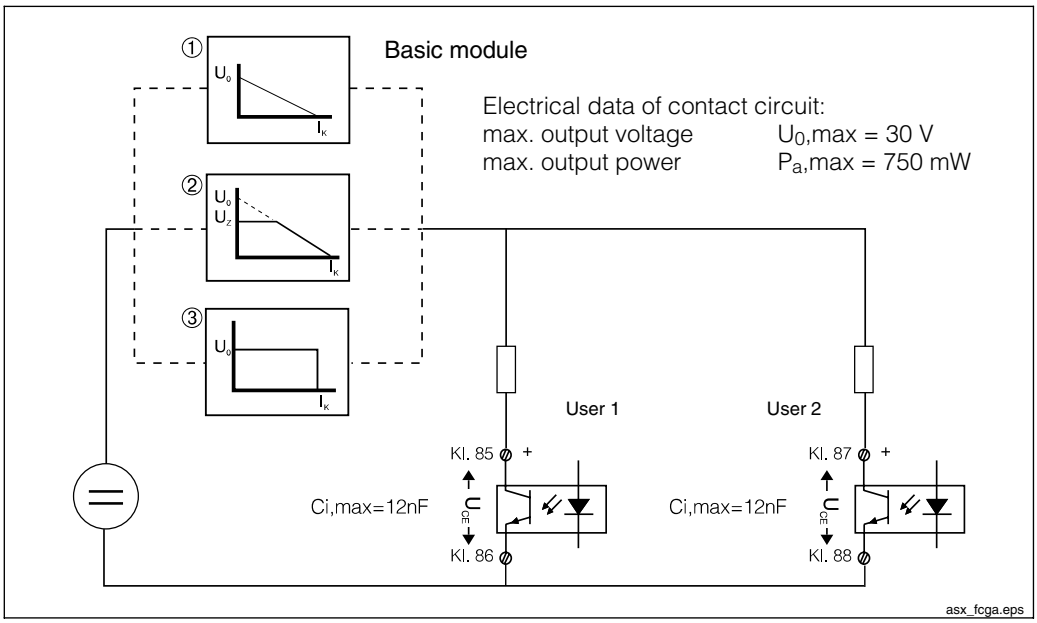

External wiring of output contacts on basic module: Only one intrinsically safe contact circuit (ia or ib) with
① linear
$P_a = ¼ \ (U_0 \cdot I_K)$
② trapezoidal
1.) $U_Z > 0.5\ U_0$
$P_a = ¼ \ (U_0 \cdot I_K)$
2.) $U_Z < 0.5\ U_0$
$P_a = (U_0 - U_Z) \cdot U_i / R_i$
③ or square-wave
$P_a = (U_0 \cdot I_K)$

Fig. 4.16 output characteristic

Note:

The optocoupler outputs are high-impedance in case of a power failure.

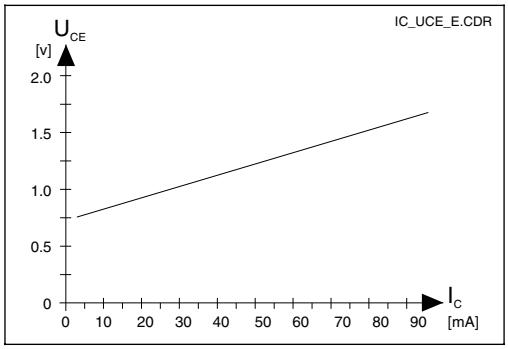

Characteristic of switching transistors on basic module and FCYK module (with output on)

Fig. 4.17

FCL1 additional module

11 Pt 100 terminal, sensor line
12 Pt 100 terminal, sensor line
13 Cable compensation terminal

For inductive sensor
14 Transmitter coil inner conductor
15 Transmitter coil screen
16 Receiver coil screen
17 Receiver coil inner conductor

For conductive sensor
14 Electrode cable screen
15 not connected
16 not connected
17 Electrode cable inner conductor

Connection data for power circuits, terminals 11 to 17:
$C_{a,max}$ = 50 nF
$L_{a,max}$ = 100 µH

Measuring channel allocation
Cond.1 / temperature 1 Slot 1
Cond.2 / temperature 2 Slot 2

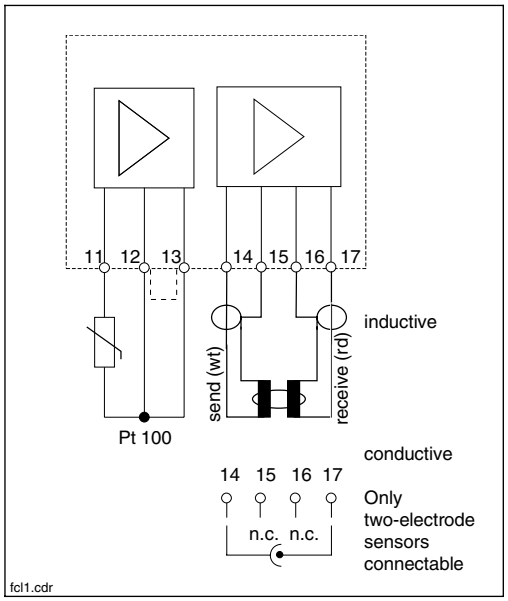

Connection of FCL1 module

Fig. 4.18

FCYK-Ex additional module:

Comprising 3 optocouplers acting as switching outputs for limit contactor or Chemoclean

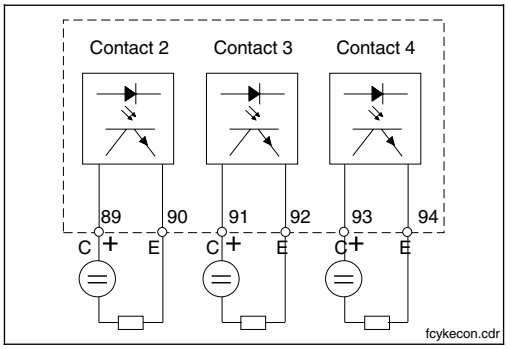

Fig. 4.19 Connection of FCYK module, Ex

89	Contact 2
90	Contact 2
91	Contact 3
92	Contact 3
93	Contact 4
94	Contact 4

Outputs with npn transistors. The emitter terminals (E) must have negative potential in relation to the collectors (C).

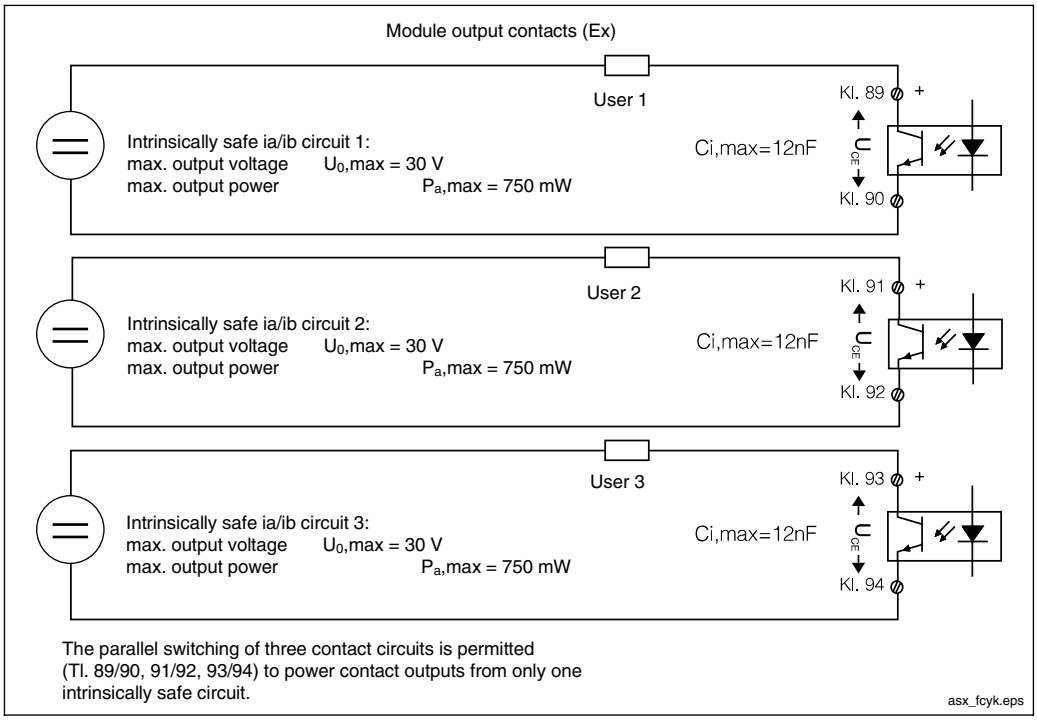

Fig. 4.20 External wiring of output contacts on FCYK module

FCXI additional module:

Comprising two contact inputs for Hold, remote measuring range switch-over and analogue input with measuring transmitter power supply.

21 Current input, positive
22 Current input, negative

81 Contact input 1
82 Contact input 1

83 Contact input 2
84 Contact input 2

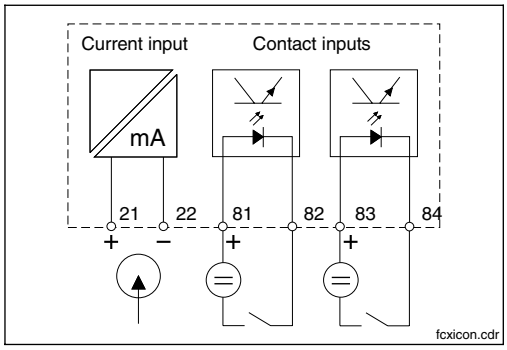

Fig. 4.21 Connection of FCXI module

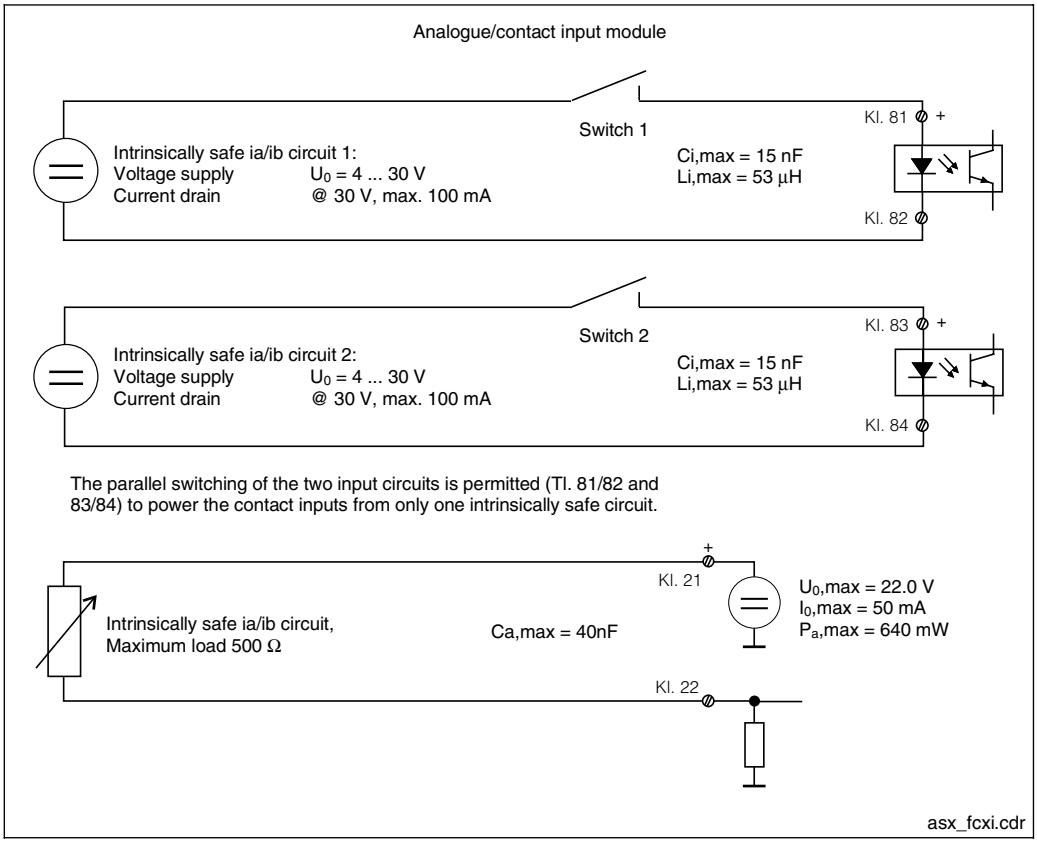

Fig. 4.22 External wiring of input circuits on FCXI module

FCYP additional module

PROFIBUS-PA digital port:

98 PA–
99 PA+

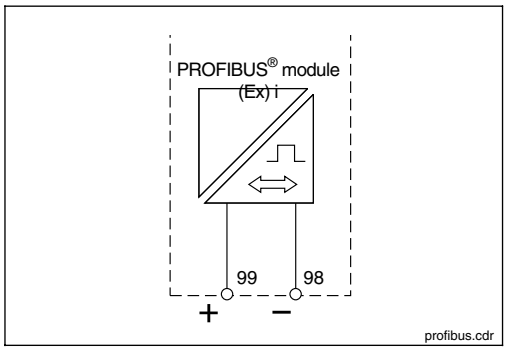

Fig. 4.23 Connection of FCYP module

4.5 Connecting conductivity sensors

Inductive sensors

Conductivity sensors are connected via special multi-core, screened measuring cable. If you need to extend the measuring cables, use the VBM junction box.

Caution:

Make absolutely sure you protect plugs and terminals from moisture. Moisture leads to inaccurate measuring results!

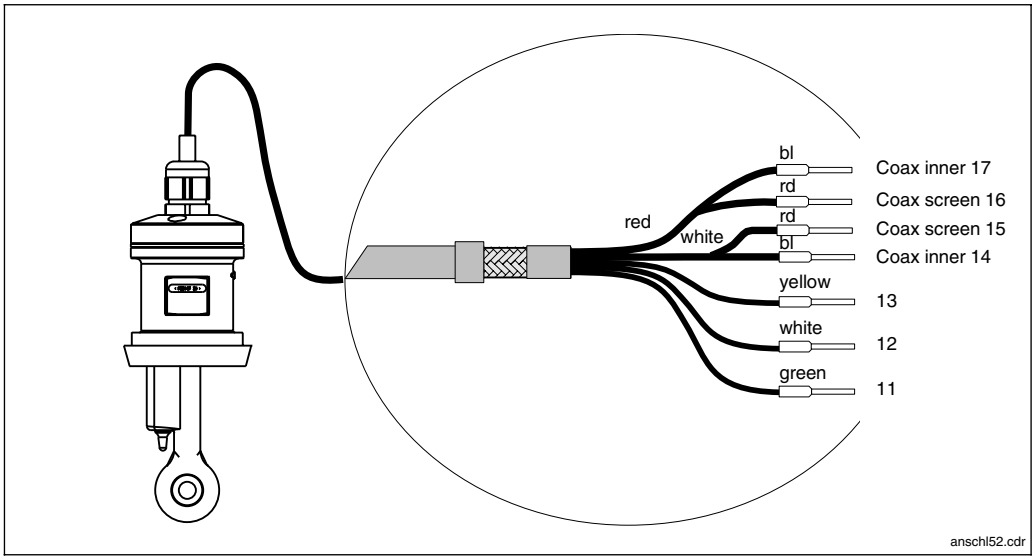

Fig. 4.24 Inductive sensor with connecting cable (here CLS 52)

Make-up and termination of measuring cable

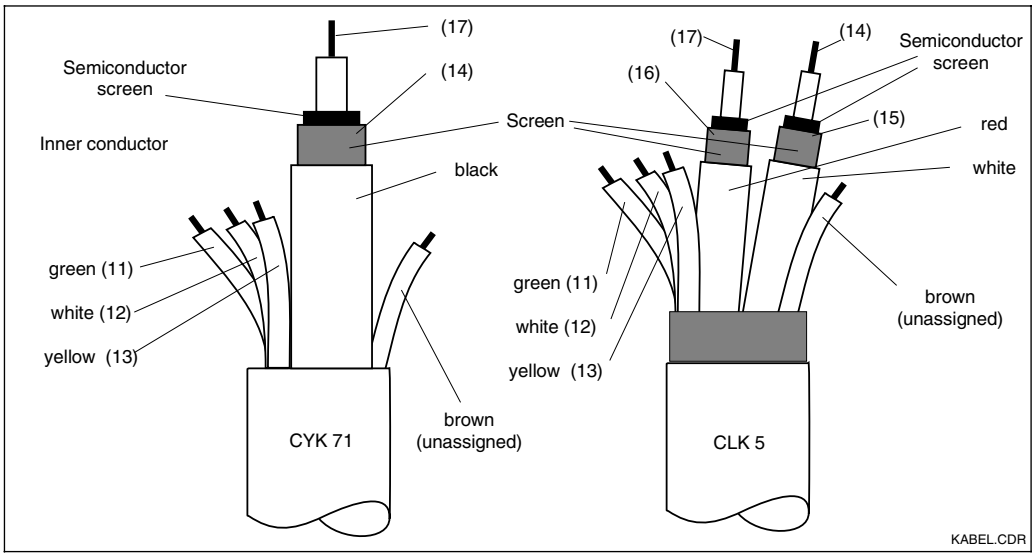

Fig. 4.25 Make-up of special measuring cables CYK 71 (left) and CLK 5 (right)

Conductive sensors

Caution:

Make absolutely sure you protect plugs and terminals from moisture. Moisture leads to inaccurate measuring results!

Note:

- The instrument has a function to offset cable length and capacitance to compensate for cable resistance (see Chapter 11.5.5 „Determine cable resistance“).
- A waiting time must be observed depending on the sensor used and the medium temperature (thermal matching) until the sensor supplies the correct temperature readings.

Special measuring cable required for connecting conductivity sensors		
Sensor type	**Cable**	**Extension**
2-electrode sensor with or without temperature sensor Pt100	CYK 71 (0.04 Ω/m)	VBM box + CYK 71
Inductive sensor CLS 50	Fixed cable on sensor	VBM box + CLK 5
Maximum cable length		
Conductivity measurement conductive	max. 100 m with CYK 71 (equivalent to 10 nF)	
Resistance measurement	max. 20 m with CYK 71 (equivalent to 2 nF)	

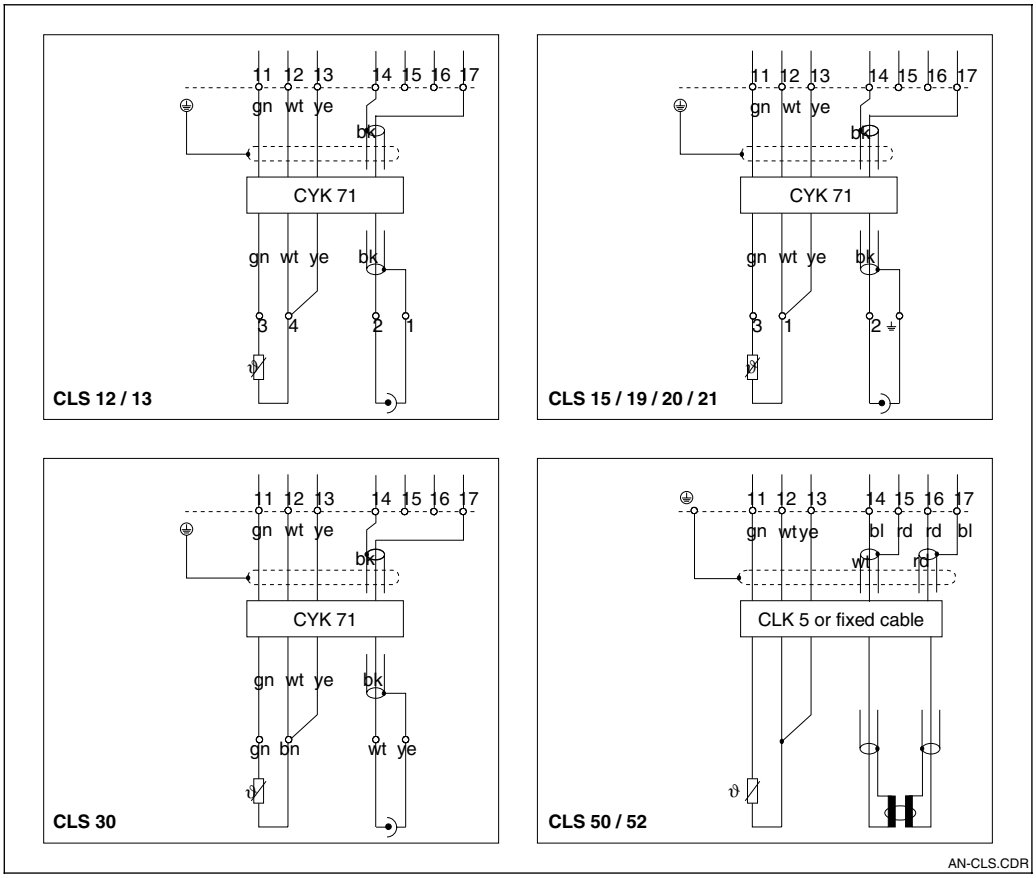

Fig. 4.26 Connection of conductive and inductive sensors

5 First start-up

5.1 Measures before first power-up

Before switching on the measuring transmitter for the first time, familiarise yourself with the operating instructions!

Caution:

Before switching on, check that all the connections are in order!

Make sure the sensor is placed in the medium or in a calibration solution, otherwise it will display implausible readings.

Warning:

Before power-up, make sure that there is no risk of damage to the system in which the instrument is integrated; e.g. valves, pumps or similar that could become activated unintentionally.

5.2 The „Start-up menu“

When the instrument is powered up for the first time, it displays the „Set-up“ menu. The menu requests all the set-up data required for operation. This automatically ensures that the necessary set-up data is complete.

First the system requests you to select a language for displaying the user interface.
A list is presented. If you select the line „English“, the line is displayed in inverse video. Confirm your choice by pressing “E” (“Enter“).
Your choice is accepted and the next request is displayed.
Go through all the other requests in the same way (cf. Chapter 6, „Operation“).

- End Start-up by pressing CAL, DIAG, MEAS and PARAM.
- The start-up routine is repeated every time the instrument is switched on until the procedure has been completed once and you have confirmed by pressing “Close” in the last field.
- Then to access the Start-up routine, you must select the menu structure using the specialist code.

Start-up / Checklist

Request	see Chapter	Selection options	Factory settings	User settings
Language	7.1.5	Language version A: Deutsch, English, Français, Italiano Language version C: Deutsch, English, Français Nederlands Japanese	English	
LC display contrast	7.1.5	Set as desired	“medium”	
Date	7.1.5	Enter current date	current date	
Time	7.1.5	Enter current time	CET (not summer time)	
Measuring type	7.1.1	Conductivity Concentration Resistance (MOHM)	Conductivity	
Sensor	7.1.1	Seleciton of Cd-Sensor: CLS 50 CLS 52 k = 0.01 / k = 0.1 / k = 1 / k = 10	CLS 52	
Measuring principle (only for difference measuring instrument)	7.1.1	Differential measurement (1-circuit or diff.)	Differential measurement	
unit	7.1.1	Select selectable SI units µS/cm, mS/cm or mS/m, S/m	µS/cm, mS/cm	
Temperature sensor 1	7.1.1	Type of temparature sensors PT 100 / PT 1000 / NTC 30 kΩ	PT 100	
Temperature sensor 2 (only for difference)	7.1.1	Type of temparature sensors	PT 100	
Temperature unit	7.1.5	Unit of temperature measurement: Celsius [°C], Fahrenheit [°F], Kelvin [K]	Celsius [°C]	
Temperature	7.3.2	Selection of temperature compensation: manual (MTC) automatic (ATC)	ATC	
Compensations temperature (only for MTC; MTC 2 only for difference)	7.3.2	–35.0 ... 250.0 °C	25.0 °C	
Air set selection (only for inductive)	11	**Suppress air set** **Perform air set** **Enter air set**	Suppress air set	

Start-up / Checklist continued				
Request	see Chapter	**Selection options**	**Factory setttings**	**User settings**
Input contact (only with FCXI card)	7.1.1	2xHold; 1xHold + 1xremote switch-over; 2xremote switch-over	2xHold	
Relay function	7.1.4	**2 relays** Maintenance, limit (for base version)	Maintenance	
		5 relays (only with FCYK) NAMUR[1] / limit Clean / 2xlimit Clean / 1xlimit / 1xservice NAMUR[1] / MRS[2] NAMUR[1] / 1xlimit / USP[3] Wartung / limit / MRS[2]	NAMUR1) / limit	
NAMUR contacts[1]	7.1.4	NC contact, NO contact	NO contact	
Failure relay	7.1.4	Fleeting contact, Steady contact	Steady contact	
Fault contact	7.1.4	Assignement of fault: to maintenance contact, to no contact	Maintenance contact	
Start-up		End, Resume	end	

[1] As per recommendation of NAMUR (Standardisation Committee for Measurement and Control in the German Chemical Industry)
[2] MRS = measuring range switch-over
[3] USP = pure water measurement acc. »United States Pharmacopeia«

6 Operation

6.1 Operating elements

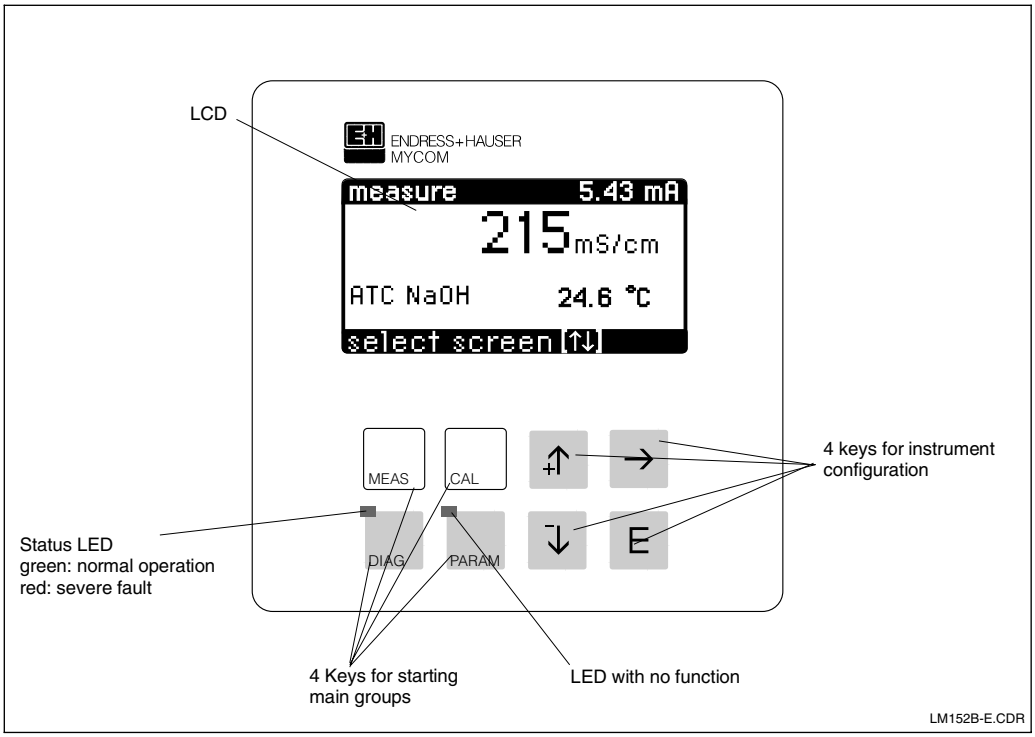

Fig. 6.1 Operating elements of Mycom CLM 152

6.2 Display

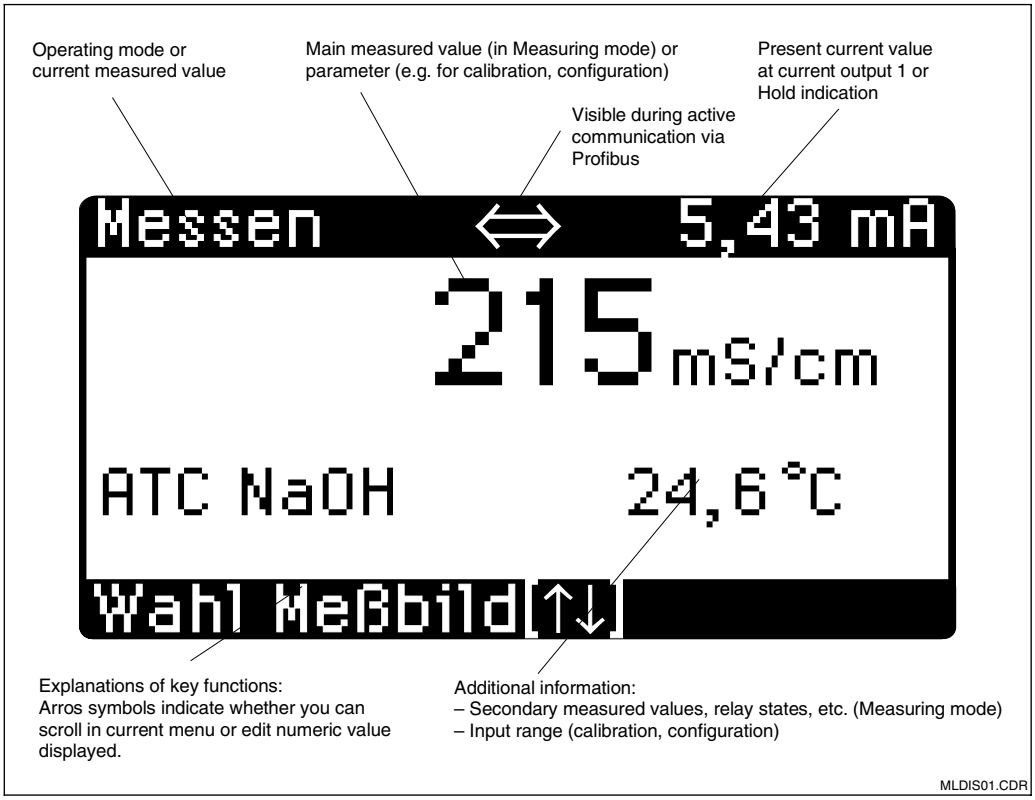

Fig. 6.2 Display of Mycom CLM 152

6.3 Key functions

MEAS

Measurement

- Measured value display
  Return to measuring mode from any position

CAL

Calibration

- Activate calibration mode
- Calibration menu display

DIAG

Diagnostics

- Call up fault and maintenance messages
- Retrieve information and statistics
- Call up service routine including simulation, internal data and instrument check

PARAM

Configuration

- Configuration menu display (setting the instrument for new measuring and control tasks)
- Return to next higher menu level

↑

- Increment number displayed in inverse video
- Select menu line by moving inverse-video bar
- Return to previous screen

↓

- Decrement number displayed in inverse video
- Select menu line by moving inverse-video bar
- Move to next screen

→

- Select editing point with multi-digit numbers

E

Enter

- Accept value or parameter during configuration
- Select inverse-video menu line

6.4 Operating concept

The function of the Mycom CLM 152 measuring transmitter are divided into four main groups:

- Measurement
- Calibration
- Diagnostics
- Configuration

The groups are called by pressing the appropriate keys (see Chapter 6.3). The main groups contain functions that are combined into sub-groups. Some of these sub-groups may also be subdivided.
The sub-groups are displayed as menus and you can select them by pressing ↑ and ↓ (inverse video line). The menu may also contain more options than are displayable on one screen page. This is indicated by a small arrow at the left-hand border of the window.
Confirm your selection by pressing E.

Note:

You fill find an overview of the Mycom menu structure on the rear fold-out pages of this manual.

Select options or the configuration set-up within the sub-groups by using the menu selection (see above) or by editing a digit.
To do this, select the digit by pressing → and set the value required by pressing ↑ and ↓.
Repeat this process for all the other digits.
Confirm your setting by pressing E.
The setting limits for digits are displayed in the penultimate line of the display. Settings outside the specified limits are not permitted.

After you confirm, the request appears for the next parameter.
When all the parameters have been requested in a sub-group, the sub-group menu re-appears.
Press the “Param” key to return to the next higher group menu.

Note:

You can also change to another main group when you are in a sub-group.
But then any setting you failed to confirm by pressing E is not saved.

If no input is made in a sub-group for longer than about 10 minutes, the instrument automatically returns to measuring mode (exceptions: Calibration, Simulation and Start-up).

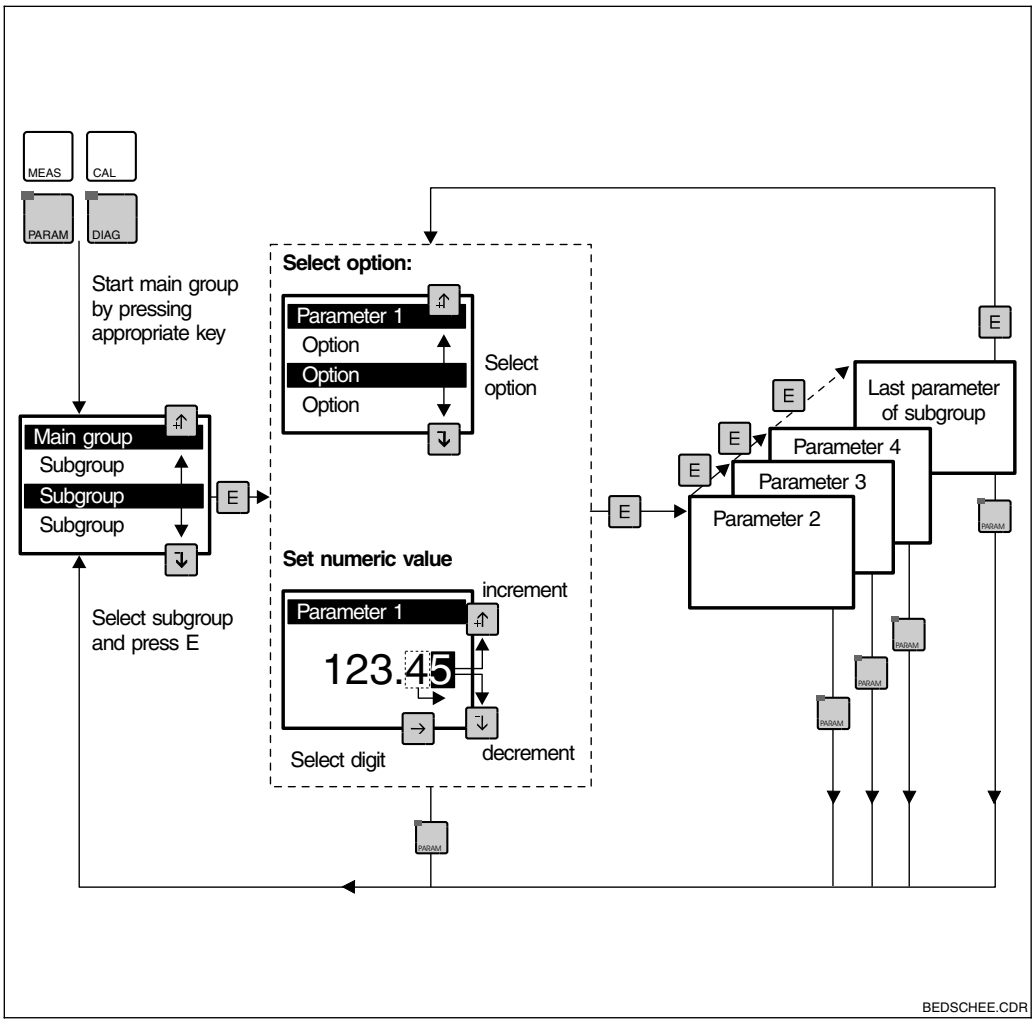

Fig. 6.3 Block diagram of Mycom-Operating concept

Hold function

In order to avoid unintentional changes to the current outputs during configuration or calibration, the present current value at the current output can be “frozen” or a fixed current can be specified by using the “Hold” function.
Limit contactor output contacts are set to passive by the “Hold” function
(NO contact open, NC contact closed).

The top display indicates “Hold” on the right instead of the current output value; on the left is the current measured value of the main parameter as usual.

Also refer to:

- Chapter 6.7, Short Operation menu: Hold on / off
- Chapter 7.2, Current Output menu, Hold type:
  Fixed current value / previous measured value
- Chapter 7.4, Calibration Preset menu, Hold at Cal.: yes / no

6.5 Measured value display formats

Press ↑ and ↓ to select between different display formats for the screens. There are differences in the size of digits and the number of additional information items.

Note:

A contact state display only appears if one or two contacts are configured as limit contactors.

Conductivity measurement			
Single-circuit	1st meas. value display	Main display: Suppl. info:	Conductivity measured value in mS/cm or µS/cm (large characters for reading from a distance) Measuring range (only for meas. range switch-over)
	2nd meas. value display	Main display: Suppl. info: switch-over),	Conductivity measured value in mS/cm or µS/cm Measuring range (only for remote measuring range Type of temperature compensation, Substance measured, Current compensation temperature
	3rd meas. value display	Main display: Suppl. info:	Conductivity measured value in mS/cm or µS/cm Same as 2nd meas. value display plus contact states (limit contactor only)
Difference	1st meas. value display	Main display: Suppl. info:	Differential conductivity measured value (ΔCD) in mS/cm or µS/cm (large characters) Measuring range (only for meas. range switch-over)
	2nd meas. value display	Main display: Suppl. info:	Differential conductivity measured value (ΔCD) in mS/cm or µS/cm Measuring range (only for meas. range switch-over), Type of temperature compensation, Substance measured, Current compensation temperature
	3rd meas. value display	Main display: Suppl. info:	Differential conductivity measured value (ΔCD) in mS/cm or µS/cm Same as 2nd meas. value display plus contact states (limit contactor only)
	4th meas. value display	Main display: Suppl. info:	Conductivity measured value channel 1 (CD1) in mS/cm or µS/cm Same as 3rd meas. value display
	5th meas. value display	Main display: Suppl. info:	Conductivity measured value channel 2 (CD2) in mS/cm or µS/cm Same as 3rd meas. value display
Concentration measurement			
Single-circuit	1st meas. value display	Main display: Suppl. info:	Concentration measured value in % (large characters) Measuring range (only for meas. range switch-over) Substance name
	2nd meas. value display	Main display: Suppl. info:	Concentration measured value in % Same as 1st meas. value display plus Type of temperature compensation, Current compensation temperature
	3rd meas. value display	Main display: Suppl. info:	Concentration measured value in % Same as 2nd meas. value display plus contact states (limit contactor only)
	4th meas. value display	Main display: Suppl. info:	Concentration measured value in % Same as 1st meas. value display plus Conductivity measured value
	5th meas. value display	Main display: Suppl. info:	Concentration measured value in % Same as 3rd meas. value display plus Conductivity measured value

Resistance measurement (only for conductive sensor)			
Single-circuit	1st meas. value display	Main display: Suppl. info:	Resistance measured value in MΩcm or kΩcm (large characters for reading from a distance) Measuring range (only for remote measuring range switch-over)
	2nd meas. value display	Main display: Suppl. info:	Resistance measured value in MΩcm or kΩcm Measuring range (only for remote measuring range switch-over), Type of temperature compensation, Substance measured, Current compensation temperature
	3rd meas. value display	Main display: Suppl. info:	Resistance measured value in MΩcm or kΩcm Same as 2nd meas. value display plus contact states (limit contactor only)
	4th meas. value display	Main display: Suppl. info:	Resistance measured value in MΩcm or kΩcm Measuring range (only for remote measuring range switch-over), Conductivity measured value
	5th meas. value display	Main display:	Resistance measured value in MΩcm or kΩcm Same as 3rd meas. value display plus Conductivity measured value
Difference	1st meas. value display	Main display: Suppl. info:	Differential resistance meas. value in MΩcm or kΩcm (large characters for reading from a distance) Measuring range (only for remote measuring range switch-over)
	2nd meas. value display	Main display: Suppl. info:	Differential resistance meas. value in MΩcm or kΩcm Measuring range (only for remote measuring range switch-over), Type of temperature compensation, Substance measured, Current compensation temperature
	3rd meas. value display	Main display: Suppl. info:	Differential resistance meas. value in MΩcm or kΩcm Same as 2nd meas. value display plus contact states (limit contactor only)
	4th meas. value display	Main display: Suppl. info:	Resistance meas. value channel 1 in MΩcm or kΩcm Same as 3rd meas. value display
	5th meas. value display	Main display: Suppl. info:	Resistance meas. value channel 2 in MΩcm or kΩcm Same as 3rd meas. value display

6.6 Locking functions

The Mycom CLM 152 has two operating levels which you can access by entering four-digit numebr codes:

- Maintenance
- Specialist

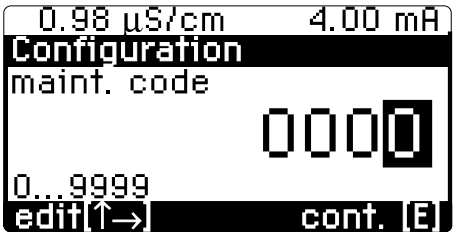

MLDIS13E.CDR

Fig. 6.4 Code request

Note:

The instrument is supplied in unlocked state.

Disabled menus are not displayed.
If you enter no code or the wrong code when requested, you can only exit the field by pressing the Meas key.
The access codes are set in the System Configuration menu group.
(see Chapter 7.1).

Accessible without a code:

- Measured value displays
- Fault list
- Information list
- Logbook
- Calibration data history
- Air set information (only on inductance model)

Accessible with maintenance code:

- Short operation
- Calibration parameters
- Temperature measurement type (ATC, MTC)
- Internal data (instrument number, SW no., FCLI SW no., module information
- Language, date, time, tag no., contrast, repairman code

Accessible with specialist code:

- All menus and functions

Caution:

If you lose the codes, you can unlock the instrument using the default code “**7156**” and set a new code in the Instrument Data / System Configuration menu.

You can also select Calibration with the repairman or specialist code without restriction.

6.7 The „Short Operation menu“

→ **Short Operation**

The Short Operation menu gives you direct access to the main functions without having to run the entire configuration menu. The following functions are grouped under the Short Operation menu:

- Hold on / off
- Manual / Auto toggle
- Setpoints for limit contactor

Short operation menu		
Function	Selection	Factory setting
Hold	Hold on / Hold off	Hold off
Clean function	Automatic on Automatic off Start cleaning (if in menu Instrument data chemoclean on)	Current state
Limit contactor mode switch-over*)	Automatic / Manual	Manual
	If „Manual“ selected: Contact 1 off / on Contact 2 off / on Current state is displayed	Contact 1 off Contact 2 off
Limit contactor setpoints*)	Enter limit 1 Enter limit 2	5 % or 95 % of MR upper value Cell dependence

*) Limit contactor mode switch-over and limit contactor setpoints are only displayed if they were activated in Instrument data / Limit contactor menu!

7 Instrument configuration

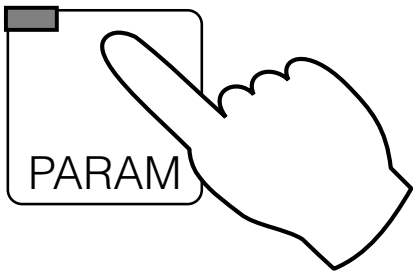

Note:

The complete menu structure is illustrated on the back pages of this manual for an overview.

→ **Set-up guide**	• Guided run through main menus	☞ Chapter 5.2
→ **Short operation**	• Hold on / off, • Relay manual mode, • Limit parameters • Chemoclean control	☞ Chapter 6.7
→ **Instrument data**		
→ System configuration	• Operating mode, sensor type, 2nd current output • Codes for locking • Output contacts • General settings	☞ Chapter 7.1
→ Current output	• Parameters for current outputs • Hold with last value / fixed value	☞ Chapter 7.2
→ Temperature	• Temperature compensation • Temperature measurement auto. / manual	☞ Chapter 7.3
→ Calibrate	• Parameters for calibration	☞ Chapter 7.4
→ Clean function	• Parameters for clean function	☞ Chapter 7.5
→ Limit functions	• All subgroups for limit configuration	☞ Chapter 8

7.1 System configuration

→ Instrument data
→ System configuration
→ Measured variable ☞ 7.1.1
→ Code ☞ 7.1.3
→ Output contacts ☞ 7.1.4
→ General settings ☞ 7.1.5

7.1.1 Measured variable

Function	Selection	Factory setting
Select measuring type	Conductivity, concentration, not selectable with differentiation), resistance	Conductivity
Select sensor	CLS 50, CLS 52, 2-ring: k = 0,01; k = 0,1; k = 1; k = 10	CLS 52 for CD, conc. 2-ring k = 0,01 for resistance
Differential or single-circuit measurement (only on instruments with two measuring channels)	Differential measurement, Single-circuit measurement	Differential measurement
Select unit	(mS / cm), (mS / cm) / (mS / m), (S / m) (kΩ cm), (MΩ cm) / (Ω m), (kΩ m)	(µS / cm), (mS / cm) for CD, conc. (kΩ cm), (MΩ cm) for MOhm
Select temperature sensor 1	PT 100 PT 1000 NTC 30 kΩ	PT 100
Select temperature sensor 2 (only for difference)	PT 100 PT 1000 NTC 30 kΩ	PT 100
Configure input contacts (only for FCXI expansion module, remote measuring range switch-over see 7.1.2)	2 x hold, 1 x hold / 1 x remote-switch-over 2 x remote-switch-over external Clean control*)	2 x hold

*) Only in relay configuration with Clean function!

Caution:

When you change operating mode, all data are reset to the factory settings (default values).

Note:

Two-circuit instruments are permanently configured as differential measuring instruments:
Current output 1: differential
Current output 2: Cond. 1, Cond. 2, Temp. 1 or Temp. 2

7.1.2 Measuring range switch-over

The Mycom CLM 152 has two options for switching over measuring ranges:

- external remote measuring range switch-over
- automatic internal measuring range switch-over (internal measuring range switch-over only possible in Conductivity mode in single-circuit mode).

Switch-over affects:

- Current output
- Limit contactor
- Temperature compensation type
- Substance selection (for concentration measurement)

The configuration has to be set by the user for each measuring range (MR1 ... MR 4) in the corresponding menu.

External remote measuring range switch-over

The measuring range can be switched over remotely by external contacts, e.g. a PLC. This requires the FCXI expansion module (electrical connection see chapter 4.4.1). You can select up to four measuring ranges.

Measuring range		MR 1	MR 2	MR 3	MR 4
Contact state (1 x remote-switch-over contact)	83 / 84	open	closed	–	–
Contact state (2 x remote-switch-over contact)	81 / 82	open	closed	open	closed
	83 / 84	open	open	closed	closed

Automatic internal measuring range switch-over (only with conductivity mode/single-circuit operation mode)

Here the Mycom switches automatically to the suitable measuring range. This requires the FCYK expansion module (electrical connection see chapter 4.4.1).
The current measuring range is signalled via contacts 3 and 4 to the downstream evaluation unit.

Note:

The function is activated automatically when contacts 3 and 4 are programmed as the »MR switch-over« (see Chapter 7.1.2).

Then you can define the switch-over points in the Instrument data/Internal MRS menu and their individual switching hystereses (LOW and HIGH values).

Example of automatic internal measuring range switch-over with four measuring ranges:

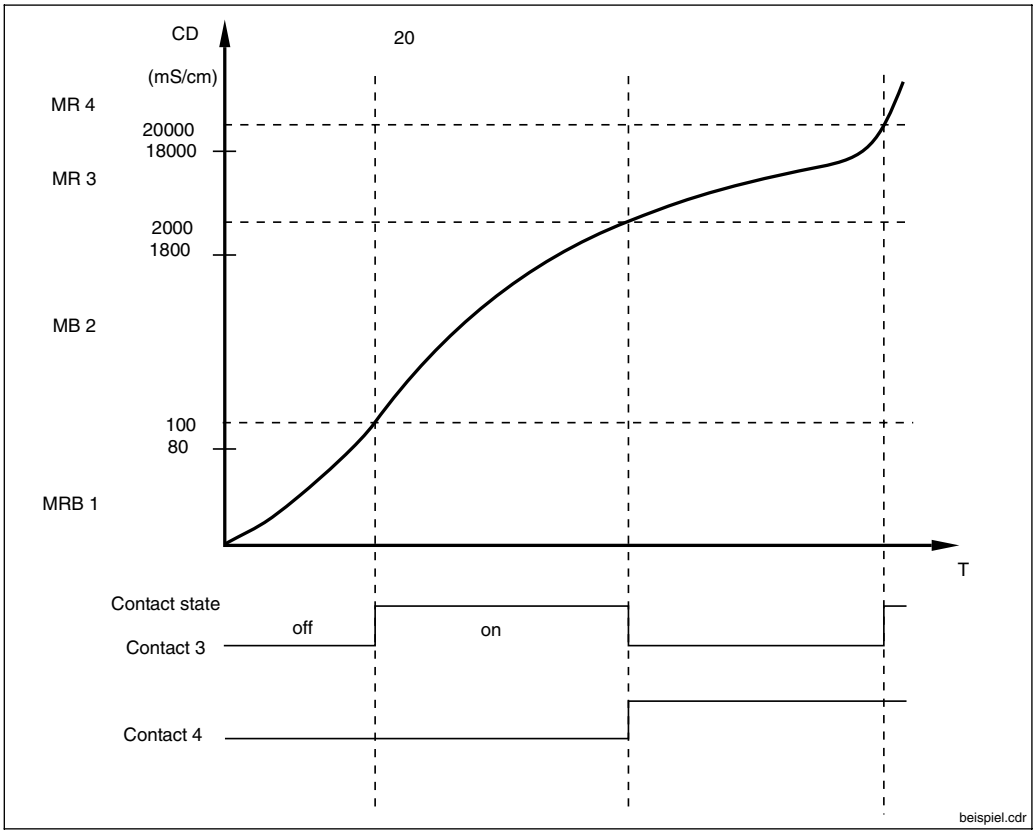

Fig. 7.1 Example of internal measuring range switch-over

See also page 39

Settings for example above:

	Trigger thresh. 1	Trigger thresh. 2	Trigger thresh. 3	Trigger thresh. 4
LOW value	—	80 µS/cm	1800 µS/cm	18 mS/cm
HIGH value	100 µS/cm	2000 µS/cm	20 µS/cm	—

7.1.3 Code

Function	Selection	Factory setting
Enter required maintenance code (0000 = no lock)	0000 ... 9999	0000
Enter required specialist code (0000 = no lock)	0000 ... 9999	0000

7.1.4 Output contacts

Caution:

- Before power-up, check that the wiring corresponds to the contact configuration you selected.
- The contacts of the non-Ex version have a different behaviour in case of power failure (see Table Contact assignment on the next page).

Function	Selection	Factory setting
Base version (2 output contacts)		
Function for contact 1 [1]	Maintenance' Limit USP (for conductivity conductive only)	Maintenance
NAMUR[2] contact type	NC contact, NO contact	NO contact
Failure relay contact type	Steady contact Fleeting contact	Steady contact
Assign E055-E078 to maintenance contact	to maintenance contact to no contact	to maintenance contact
If equipped with FCYK expansion module (5 output contacts)		
Function for contacts 1 ... 4 [1]	**Inductive** NAMUR[2] / limit NAMUR[2] / MR switch-over[3] Maintenance / limit / MRS[3] 1 x limit / Chemoclean 2 x limit / Chemoclean **konductive** NAMUR / limit / USP	NAMUR / limit

[1] see Table „Contact assignment" on next page
[2] As per recommendation of NAMUR (Standardisation Committee for Measurement and Control in the German Chemical Industry)
[3] Relay configuration with MR switch-over in conductivity/single-circuit-mode only

Contact assignment in base version			
	Select »Maintenance«	Select »Limit«	Select »USP«
Failure contact Tl. 85/86	Failure [1]	Failure [1]	Failure [1]
Contact 1 Tl. 87/88	Maintenance required [2]	Limit contact [2]	USP [2]

Relay contact of non-Ex version on power failure:
[1] active (NO contact closed, NC contact open)
[2] passive (NO contact open, NC contact closed)

Contact assignment when FYCK expansion module equipped						
Select	»NAMUR«, Limit	»NAMUR« / MR switch-over	Maintenance / limit / MRS	1 x limit Chemoclean	2 x limit Chemoclean	NAMUR / limit / USP
Failure contact Tl. 85/86	Failure [1]	Failure [1]	Failure [1]	Failure [1]	Failure [1]	Failure [1]
Contact 1 Tl. 87/88	Maintenance required [2]	Maintenance required [2]	Maintenance required [2]	Maintenance required [2]	Limit contact 1 [2]	Maintenance required [2]
Contact 2 Tl. 89/90	Function check [2]	Function check [2]	Limit contact [2]	Limit contact [2]	Limit contact 2 [2]	Function check [2]
Contact 3 Tl. 91/92	Limit contact 1 [2]	MRS 1 [2]	MRS 1 [2]	Water [3]	Water [3]	Limit contact [2]
Contact 4 Tl. 93/94	Limit contact 2 [2]	MRS 2 2)	MRS 2 [2]	Clean. agent [3]	Clean. agent [3]	USP [2]

Relay contact of non-Ex version on power failure:
[1] active (NO contact closed, NC contact open)
[2] passive (NO contact open, NC contact closed)

See also page 37

Hinweis:

The **»fault contact«** is active in case of system faults and defects (error codes 1 to 23) which can cause the instrument to fail.

The preset error current is output at current outputs 1 and 2 (see Chapter 7.2.1).

The fault contact is defaulted for all settings.

The **»maintenance contact«,** if configured, signals faults in the instrument or process.
Operation can continue but the measuring system will then require an inspection.

Depending on the configuration in 7.1.4 the maintenance contact is signalled in fault codes 30 to 52 or 30 to 78.

The **»function check«** contact is active in Hold state and when settings are made to the instrument (e.g. during calibration and configuration).

7.1.5 General settings

Function	Selection	Factory setting
Select language	Language version A: Deutsch, English, Français, Italiano Language version C: Deutsch, English, Français, Nederlands, Japanese	English
Input damping[1)] (size of time window over which measurement is averaged; 2 measured values per second)	Filter length, 0 (= off) ... 30	0
Temperature unit	Celsius [°C] Fahrenheit [°F] Kelvin [K]	Celsius [°C]
Set date	Weekday, day, month, year	
Set time	Hour, minute	
Tag number (max. 32 chars.) (measuring point designation)	0 ... 9; A ... Z	
Display contrast (E+H logo)	Set for optimum view	

[1)] Input damping:
To increase immunity of measurement to interference, a continuous input damping function can be switched on in the form of an input filter (averaging function). The filter length must be adapted by trial and error to the process so that, although transients are suppressed, any actual changes in the measured value are recorded.

7.2 Current output

→ Instrument data
→ General settings ☞ 7.2.1
→ Current output 1 ☞ 7.2.1
→ Current output 2 ☞ 7.2.1

7.2.1 Current output

Current output signal: characteristics and allocation

Function	Selection	Factory setting
General		
Current monitoring (Cable break activates alarm contact, error message 15 / 16)	inactive active	inactive
Erro current (output on»alarm« to current output 1 and 2)	Off (no error current) Min current [1)] Max current [2)]	Off
Hold type	Fixed current value Last measured current	fixed current value
Hold current (only on selection of »fixed current value«)	0.00 ... 22.00 mA	20.00 mA
Current output 1		
Measuring current range	0 ... 20 mA or 4 ... 20 mA	4 ... 20 mA
Outputdamping	1.0 ... 20.0 mA/s	20.0 mA/s
Select Characteristic for output signal	for concentration: linear for conductivity: linear, bilinear, logarithmic,, table characteristic only for single circuit for resistance: linear, bilinear, logarithmic	linear
Select Remote switch-over measuring range (only for activated remote switch-over, see Parameter menu, Chapter 7.1.1)	Measuring range 1 ... Measuring range 4	measuring range 1
Enter measuring range limits of selected characteristic	Setting options and factory settings see under A) to D) (next page)	

Note

When »last measured value« is set, the value is saved. When the instrument is restarted with hold active, the saved value is output.

Current output 2		
Definition of parameter for second current output (only for instrument with 2nd Cond. input)	Cond. 1, Cond. 2, Temperature 1, Temperature 2	Temperature 1
Measuring current range	0 ... 20 mA or 4 ... 20 mA	4 ... 20 mA
Output damping	1.0 ... 20.0 mA/s	20.0 mA/s
Setting options for Temp. 1 or Temp. 2 (for differential measurement)		
Measuring range lower limit	Temperature: –35.0 ... +250.0 °C	0.0 °C
Measuring range upper limit	Temperature: –35.0 ... +250.0 °C	200.0 °C
Setting options for Cond.1 or Cond.2		
Enter measuring range limits dependent on selected characteristic	Setting options and factory settings see under A) to D) (next page)	

1) 0.00 mA at measuring current range 0 ... 20 mA
2.40 mA at measuring current range 4 ... 20 mA
2) 22.00 mA

The current output signal characteristic can be matched to the requirements of the downstream signal processing, display or recording equipment.
The allocation of the measured value to the current output signal depends on the internal measuring ranges of the instrument and the characteristic curve you select.

Choose between the following characteristics:

A) linear
B) bilinear
C) logarithmic
D) Table (freely programmable current output characteristics

A) Linear current output signal characteristic

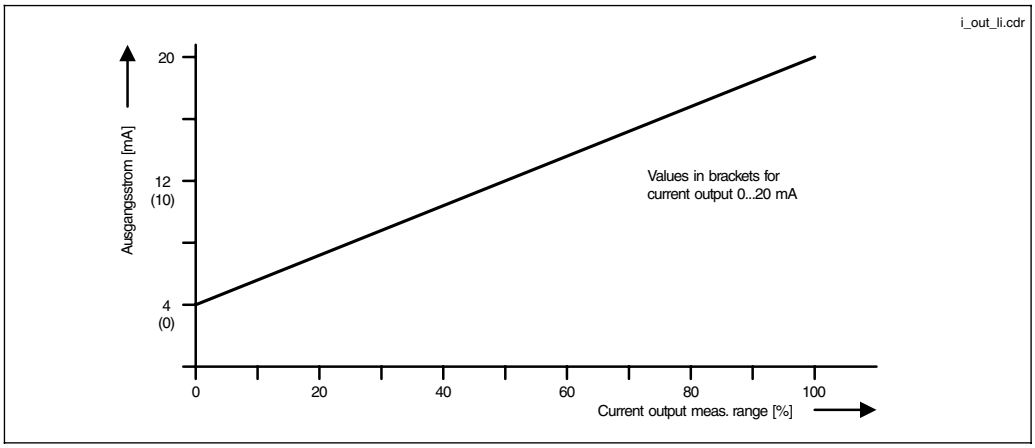

Fig. 7.2 Current output signal with linear characteristic

Sensor	MR 1 [1)]	MR 2 [1)]	MR 3 [1)]	MR 4 [1)]	MR 5 [1)]
Conductivity					
CLS 50	0 – 200.0 µS/cm	200 – 2000 µS/cm	2.00 – 20.00 mS/cm	20.0 – 200.0 mS/cm	200 – 1000 mS/cm
max. TD	20.0 µS/cm	200 µS/cm	2.00 mS/cm	20.0 mS/cm	100 mS/cm
CLS 52	0 – 2000 µS/cm	2.00 – 20.00 mS/cm	20.0 – 200.0 mS/cm	200 – 1000 mS/cm	
max. TD	200 µS/cm	2.00 mS/cm	20.0 mS/cm	100 mS/cm	
k = 0.01	0.0 – 200.0 nS/cm	0.200 – 2.000 µS/cm	2.00 – 20.00 µS/cm	20.0 – 200.0 µS/cm	
max. TD	20.0 nS/cm	0.200 µS/cm	2.00 µS/cm	20.0 µS/cm	
k = 0.1	0.000 – 2.000 µS/cm	2.00 – 20.00 µS/cm	20.0 – 200.0 µS/cm	200 – 2000 µS/cm	
max. TD	0.200 µS/cm	2.00 µS/cm	20.0 µS/cm	200 µS/cm	
k = 1	0.00 – 20.00 µS/cm	20.0 – 200.0 µS/cm	200 – 2000 µS/cm	2.00 – 20.00 mS/cm	
max. TD	2.00 µS/cm	20.0 µS/cm	200 µS/cm	2.00 mS/cm	
k = 10	0.0 – 200.0 µS/cm	200 – 2000 µS/cm	2.00 – 20.00 mS/cm	20.0 – 200.0 mS/cm	
max. TD	20.0 µS/cm	200 µS/cm	2.00 mS/cm	20.0 mS/cm	
MΩ					
k = 0.01	20.0 – 200.0 kΩ cm	200 – 2000 kΩ cm	2.00 – 20.00 MΩ cm		
max. TD	20.0 kΩ cm	200 kΩ cm	2.00 MΩ cm		
k = 0.1	2.00 – 20.00 kΩ cm	20.0 – 200.0 kΩ cm	200 – 2000 kΩ cm		
max. TD	200 kΩ cm	200 kΩ cm	200 kΩ cm		
k = 1	0.200 – 2.000 kΩ cm	2.00 – 20.00 kΩ cm	20.0 – 200.0 kΩ cm		
max. TD	0.200 kΩ cm	2.00 kΩ cm	20.0 kΩ cm		

1) The measuring range is adapted automatically to achieve maximum precision and resolution via the internal switching steps.

Conductivity factory setting:
0/4 mA → 0 mS
20 mA → MR end value

Factory setting MΩ
0/4 µA → MR start value
20 mA → MR end value

Example: Measuring range allocation of a sensor with CLS 52, rising characteristic

- The measuring range is determined by defining the conductivity values at 0 mA, 4 mA and 20 mA.
- The difference between the 20 mA value and the 0/4 mA value must be greater than the current output spread TD of the switching step in which the 20 mA value is located.
- If 300 µS/cm is specified for the 20 mA value, the 0/4 mA value must be at least 200 µS/cm (TD for switching step 1) smaller.
- Possibilities 100 µS/cm ... 300 µS/cm
  or 0.0 µS/cm ... 300 µS/cm
  but not 150 µS/cm ... 300 µS/cm!

B) Bilinear current output signal characteristic

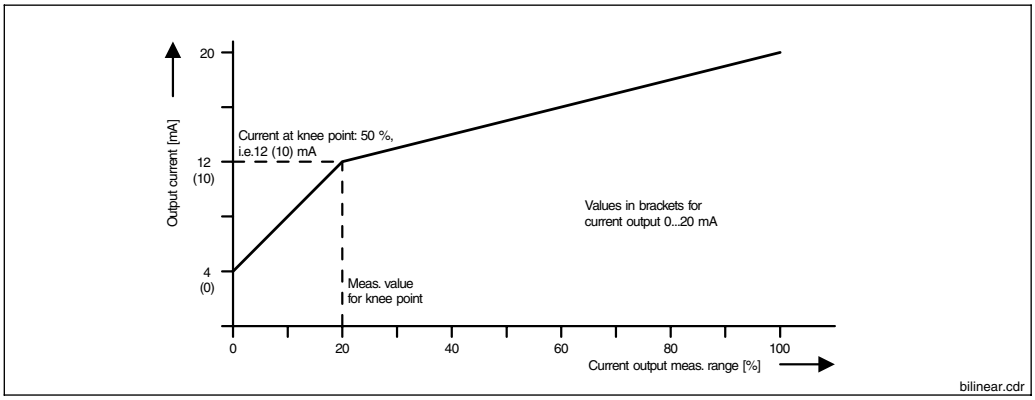

Fig. 7.3 Current output signal with bilinear characteristic

Sensor	Range 20 mA input	Input range of knee value
Conductivity		
CLS 50	200 mS/cm – 1000 mS/cm	20.0 µS/cm – 200.0 mS/cm
CLS 52	2.00 mS/cm – 1000 mS/cm	200 µS/cm – 200.0 mS/cm
k = 0.01	0.200 µS/cm – 200.0 µS/cm	20.0 nS/cm – 20.00 µS/cm
k = 0.1	2.00 µS/cm – 2000 µS/cm	0.200 µS/cm – 200.0 µS/cm
k = 1	20.0 µS/cm – 20.00 mS/cm	2.00 µS/cm – 2000 µS/cm
k = 10	200 µS/cm – 200.0 mS/cm	20.0 µS/cm – 20.00 mS/cm
MΩ		
k = 0.01	200 kΩ cm – 20.00 MΩ cm	20.0 kΩ cm – 2000 kΩ cm
k = 0.1	20.0 kΩ cm – 2000 kΩ cm	2.00 kΩ cm – 200.0 kΩ cm
k = 1	2.00 kΩ cm – 200.0 kΩ cm	0.200 kΩ cm – 20.00 kΩ cm

The minimum current output spread TD is determined by the switching step in which the knee point is located.
It is 10% of the switching step end value (see Table »linear«).

The measured value for the knee point must be less than (20 mA value – TD).

The 0/4 mA value must always be defined as 0 S/cm.

C) Logarithmic current output signal characteristic

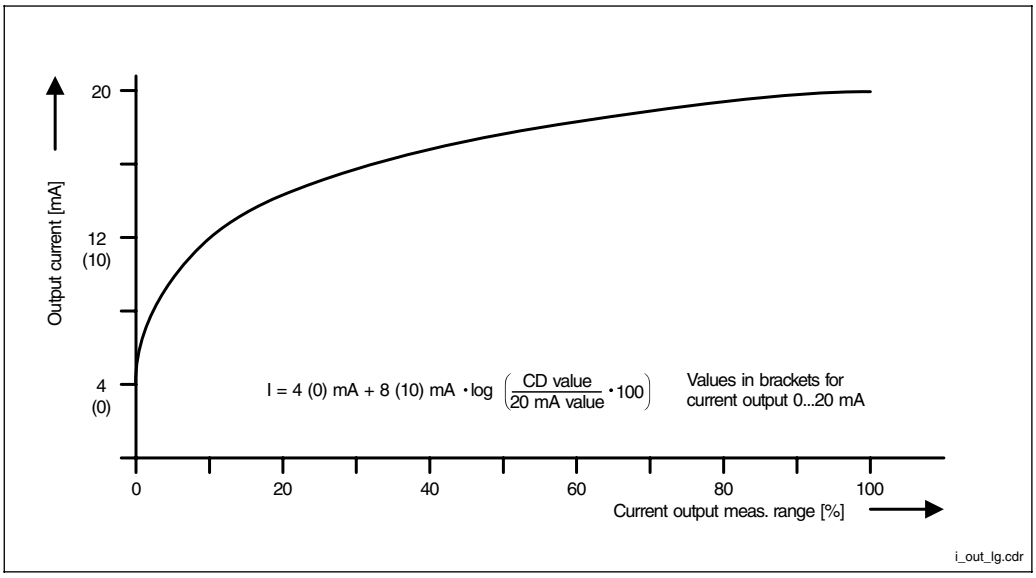

Fig. 7.4 Current output signal with logarithmic characteristic

Sensor	Range 20 mA input
Conductivity	
CLS 50	200 µS/cm – 1000 mS/cm
CLS 52	2.00 mS/cm – 1000 mS/cm
k = 0.01	0.200 µS/cm – 200.0 µS/cm
k = 0.1	2.00 µS/cm – 2000 µS/cm
k = 1	20.0 µS/cm – 20.00 mS/cm
k = 10	200 µS/cm – 200.0 mS/cm
MΩ	
k = 0.01	200 kΩ cm – 20.00 MΩ cm
k = 0.1	20.0 kΩ cm – 2000 kΩ cm
k = 1	2.00 kΩ cm – 200.0 kΩ cm

The 0/4 mA value is automatically set to 1% of the 20 mA value.

D) Freely selectable current output characteristic

A current output table containing up to 21 elements is provided to implement any other output characteristics:

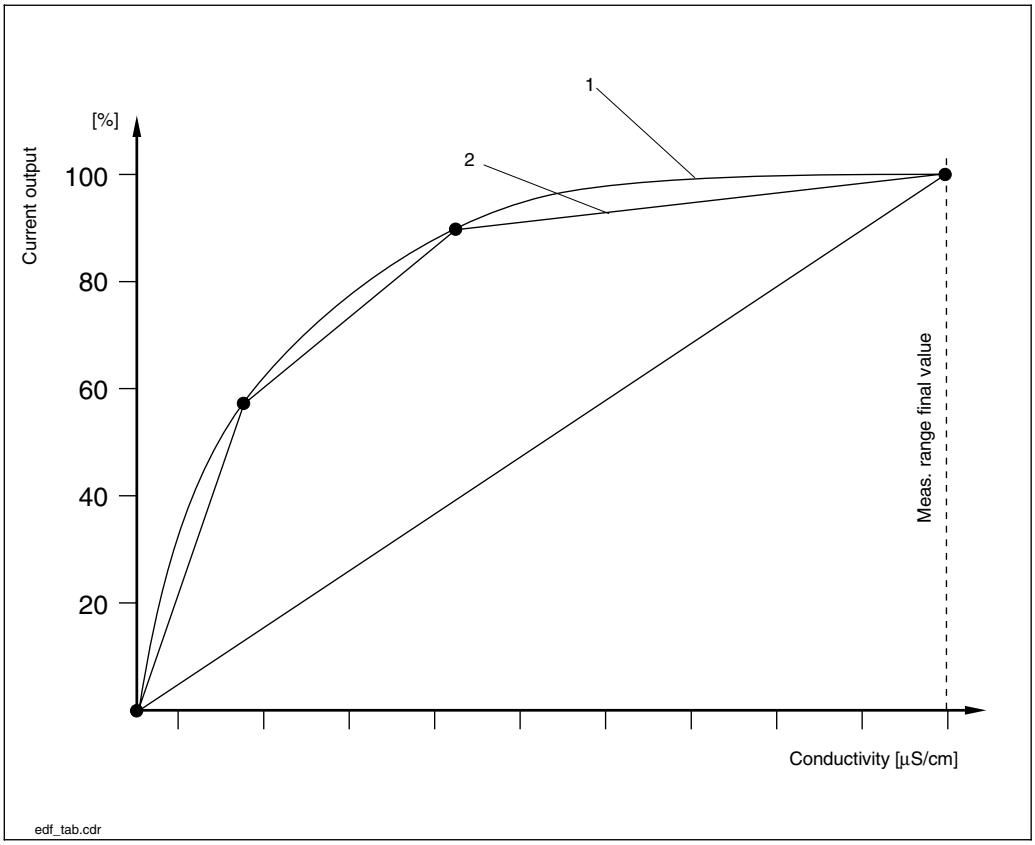

Fig. 7.5 Example of characteristic with 2 and 4 support points

1: real curve
2: interpolated curve

Example of a current output table for log 3

Current output [%]	Conductivity [µS/cm]	Current output [%]	Conductivity [µS/cm]
0	0.1	55	4.47
5	0.14	60	6.31
10	0.2	65	8.91
15	0.28	70	12.6
20	0.4	75	17.8
25	0.56	80	25.1
30	0.79	85	35.5
35	1.12	90	50.1
40	1.58	95	70.8
45	2.24	100	100
50	3.16		

Programming the current output table:

Function	Selection	Factory setting
Select support point	Enter number of support point 2 ... 21	2
Enter value for current output (%) and conductivity	0 ... 100 % 0 ... Measuring value final value (dependent on connected sensor, see p. 43)	
Status display	Current output and conductivity value must increase from element to element, otherwise an error message will appear: • „Percentage values monotone non-increasing» or • „CD values monotone non-increasing	

7.3 Temperature compensation

→ Instrument data

→Temperature

→ Temperature compensation ☞ 7.3.1
→ Temperature measurement ☞ 7.3.2

The temperature coefficient indicates the change in conductivity per degree of temperature. It is dependent on the chemical composition of the solution and on its concentration and temperature).

Salt solutions (NaCl) have a non-linear temperature coefficient. The NaCl characteristic at 18 °C (as per IEC 746 for low concentrations) is stored in the instrument.

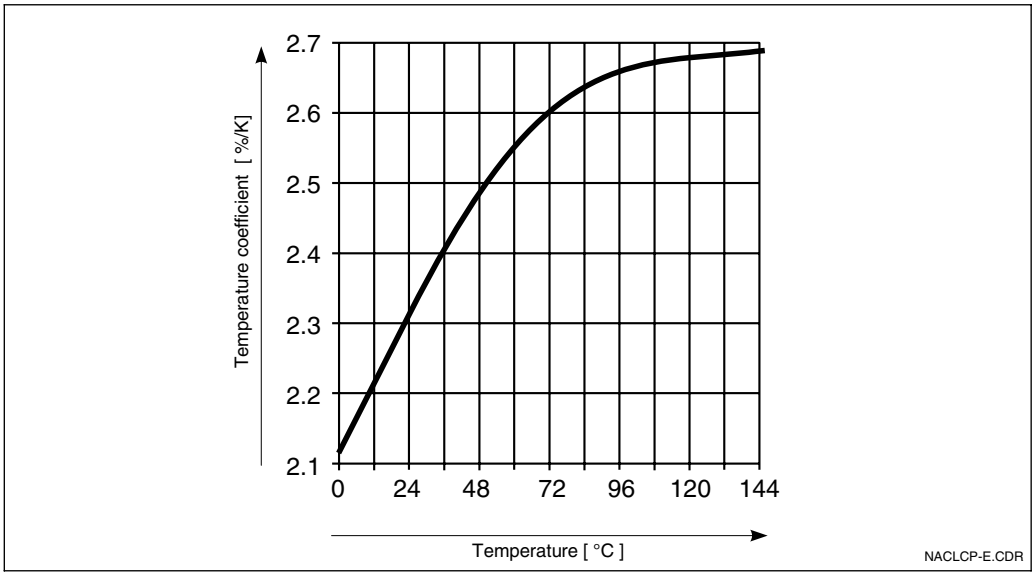

Fig. 7.6 Dependence of temperature coefficient on temperature in NaCl solutions

7.3.1 Temperature compensation

Function	Selection[1]	Factory setting
Measuring range selection with activated remote switch-over	Measuring ranges 1 ... 4	Measuring range 1
Type of temperature compensation (for conductivity)	No comp., linear, NaCl as per IEC 746, Tc table, ultrapure water NaCl, ultrapure water USER	linear
Type of temperature compensation (for resistance)	No comp., linear, Ultrapure water NaCl	linear
Type of temperature compensation (for concentration measurement)	No comp., Substance table (see Chapter 7.6)	No comp.
If »linear« selected		
Enter reference temperature	–35.0 ... +250.0 °C	25.0 °C
Enter temperature coefficient	0.00 ... 10.00 % / K	2.10 % / K
If »NaCl as per IEC 746« selected or »ultrapure water NaCl«		
No other settings necessary		
If »Tc table« selected or »ultrapure water USER«		
Substance selection Tc table	NaOH, HNO3, H3PO4, H2SO4 } (fixed, no other settings needed) USER1 ... USER4 (freely selectable)	NaOH
Substance selection ultrapure water USER	pure HCl (ultrapure water with traces of HCl) USER2 ... USER4	pure HCl
Enter substance name for selected, freely definable substance (USER1 ... USER4)	0 ... 9; a ... Z (max. 5 digits)	USER1
Enter number of support points for Tc table	2 ... 10	2
At each support point a temperature coefficient is assigned a temperature value[2]	Temperature 000.0 °C / Temp. coefficient 00.00 % / K	

[1] Select value by using »↑↓« keys.
Press »→« to access Edit mode.
Select point using »→« and edit using »↑↓« keys.
Confirm edited value by pressing »E«.
Select other values using »↑↓« keys
or confirm all settings by pressing »E«.

[2] The temperature values must be entered strictly monotonic increasing and with a difference of minimum 10 K. The Tc values are not subject to check. After entry of a Tc table, it is checked for validity.

7.3.2 Temperature measurement

For the temperature measurement, a temperature compensation must be carried out either manually or automatically.

Manual temperature compensation (MTC):

Without temperature sensor.
Enter the process temperature directly within the range from –35 °C to 250 °C.

Proceed as follows:

- Select »MTC« from the Temperature measurement menu
- Enter the known process temperature in the »MTC temp.« field
- For differential measurements: repeat the procedure for the second measuring point

Note:

At »MTC« no current output is available for temperature. This applies as well, if a completely installed measuring device is switched from »ATC« to »MTC«.

Automatic temperature comp. (ATC):

To obtain a precise temperature measurement, you can calibrate the temperature sensor of the sensor independently of the conductivity measurement.
A precision temperature sensor is required to carry out the comparative measurement.
The temperature of the measurement solution must be within the temperature measuring range of –35 °C to 250 °C.
The calibration involves shifting the Pt 100 characteristic to the temperature level measured.

Proceed as follows:

- Immerse the sensor in the measuring solution together with the precision temperature sensor (comparative measurement)
- Select »ATC« from the temperature measurement menu
- Enter the temperature value of the comparative measurement in the »Offset temp.« field
- For differential measurements: repeat the procedure for the second measuring point

Function	Selection	Factory setting
Type of temperature compensation	manual (MTC) automatic (ATC)	automatic (ATC)
If »automatic (ATC)« selected		
Enter actual temperature value for channel 1	–35.0 ... +250.0 °C	
Display temperature 1, offset 1	no selection	
Enter actual temperature value for channel 2 (only for difference)	–35.0 ... +250.0 °C	
Display temperature 2, offset 2 (only for difference)	no selection	
If »manual (MTC)« selected		
Enter MTC temperature	–35.0 ... +250.0 °C	25.0 °C
Enter MTC temperature Channel 2 (only difference)	–35.0 ... +250.0 °C	25.0 °C

7.4 Calibration presettings

→ Instrument data

→ Calibration

Function	Selection	Factory setting
Hold for calibration	yes, no	yes
Enter temperature coefficient Tc of calibration solution	0.00 ... 10.00 %/K	2.10 %/K
Enter temperature of calibration solution (only for MTC)	–35.0 ... +250.0 °C	25.0 °C

7.5 Clean function

→ Instrument data

→ Chemoclean

The »Chemoclean« clean function requires a device with a total of five output contacts.

The CLA 111 assembly and the CLR 30 spray head are required to automate the cleaning functions.

Contact 3 (terminal 91/92) is used for the motive water, contact 4 (terminal 93/94) is for dosing of cleaner.

The »Chemoclean« clean function must be set in the »System configuration / Output contacts« menu (see Chapter 7.1.4).

Function	Selection	Factory setting
Switch on/off clean function, set parameters	Automatic ON Automatic OFF Settings	Automatic OFF
If „Setting» selected		
Type of cleaning program	Interval cleaning, Week program	Interval cleaning
If »Interval cleaning« selected		
Cleaning cycle	0.1 ... 99 h (resolution 0.1 h / 6 min)	8 h
If »Week program« selected		
Parameter week program	Set, Cancel	Set
Week program	Number of starts (0 ... 12) individually for every weekday (Mon ... Sun)	0
Day program	Start time individually for every start number	00 h 00 min
Next day	Edit next weekday, Cancel	
Pre-rinse time	0 ... 999 s	10 s
Cleaning time	0 ... 999 s	5 s
Post-rinse time	0 ... 999 s	10 s
Repeat rate	0 ... 5 times	0
Number of cleaning cycles without cleaning agent	0 ... 9 times	0
Hold for Chemoclean	ON, OFF	ON
Hold continuation time (measurement settling time)	0 ... 999 s	10 s
Total cleaning time	no selection	00 h 00 m 00 s

7.6 Substance selection / Concentration measurement

→ Instrument data

→ Substance selection

Note:

This menu only appears when the concentration measurement is set as the measuring type (see Parameter menu, Chap. 7.1.1).

Function	Selection	Factory setting
Select measuring range with remote switch-over activated	Measuring range 1 ... 4	Measuring range 1
Select substance	NaOH, HNO3, H3PO4, H2SO4 (fixed, no further settings required) USER1 ... USER4 (freely selectable)	NaOH
Für USER1 ... USER4		
Enter substance name	Substance name, max. 5 chars. 0 ... 9; a ... Z	USER 1
Enter number of support points for substance concentration curve	Support point substance curve, 2 ... 10	2
A specific concentration is assigned to a conductivity value at every support point[1]	Concentration 00.00 % Conductivity 0.000 mS/cm	
Enter number of support points for Tc table	Support points for Tc table, 2 ... 10	2
A temperature coefficient is assigned to a temperature value for each support point[2]	Temperature 000.0 °C Temp. coefficient 00.00 %/K	

[1] *Concentration values:*
The entered values must be strictly monotonic increasing or decreasing.

Conductivity values:
The entered values must be strictly monotonic increasing or decreasing. They must have a minimum distance.
a) If the successive conductivity values are in the same switching range, then the minimum distance is 0.5 % of the end value of the switching range.
b) If the successive conductivity values are in different switching ranges, then the minimum distance is 0.5 % of the end value of the higher switching range.
If the mininum distance is not reached, then an error message is given and the table is marked as invalid.

Switching range	Minimum distance	Switching range	Minimum distance
0.0 ... 200.0 nS/cm	1 nS/cm	200 ... 2000 µS/cm	10 µS/cm
0.200 ... 2.000 µS/cm	10 nS/cm	2.00 ... 20.00 mS/cm	100 µS/cm
2.00 ... 20.00 µS/cm	100 nS/cm	20.0 ... 200.0 mS/cm	1 mS/cm
20.0 ... 200.0 µS/cm	1 µS/cm	200 ... 2000 mS/cm	10 mS/cm

After entry of a substance table, the table elements are checked for validity. The concentration and conductivity values are checked separately.

[2] The temperature values must be entered strictly monotonic increasing and with a difference of minimum 10 K. The Tc values are not subject to check. After entry of a Tc table, it is checked for validity.

8 Limit configuration

Limit contacts

Each contact is either permanently closed or permanently open.

The nature and scope of the possible settings are determined by the equipment available in your instrument as well as by the preliminary settings you have made in the System configuration / Output contacts menu. (See Chapter 7.1.4, Output contacts menu, relay allocation.)

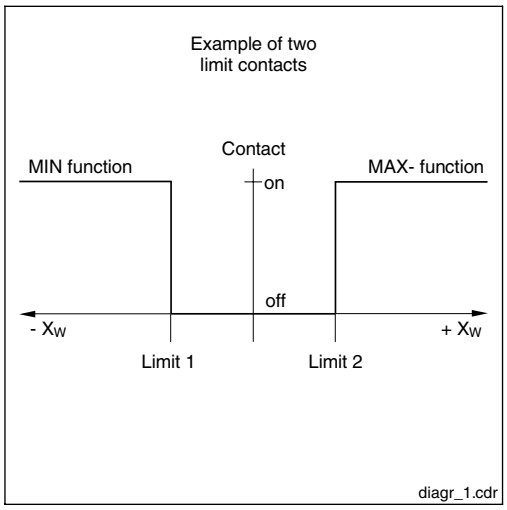

Fig. 8.1 Control characteristic of a limit contactor
X_W = control deviation
Yh = Variable output

8.1 Instruments with two contacts

→ Instrument data

→ Limit contactor

Function	Selection	Factory setting
Select group	Limit configuration Alarm configuration Operating mode	Limit configuration
If „Limit configuration“ selected		
Switch on/off output	on, off	off
Limit	see Table “Cell dependence“	
Hysteresis	see Table “Cell dependence“	
Contact function	Min function Max function	Min function
On delay	0 ... 7200 s	0 s
Off delay	0 ... 7200 s	0 s
Contact type	NC contact, NO contact	NO contact
If „Alarm configuration“ selected		
Alarm threshold	see Table “Cell dependence“	
Alarm delay	0 ... 6000 s	0 s
If „Operating mode“ selected		
Switch over operating mode	Auto limit contactor 1 Manual limit contactor 1	Manual limit contactor 1
Limit contactor manual mode (if „Manual“ selected)	off, on	off

Cell dependency

	Limit		**Hysteresis**		**Alarm**	
	Selection	Default	Selection	Default	Selection	Default
CLS 50	0 µS/cm – 1000 mS/cm	Limit 1: 50.0 mS/cm Limit 2: 950 mS/cm	0.1 µS/cm – 200.0 mS/cm	20.00 mS/cm	0.1 µS/cm – 1000 mS/cm	50.0 mS/cm
CLS 52	0 µS/cm – 1000 mS/cm	Limit 1: 50.0 mS/cm Limit 2: 950 mS/cm	1 µS/cm – 200.0 mS/cm	20.00 mS/cm	1 µS/cm – 1000 mS/cm	50.0 mS/cm
k = 0.01	0 nS/cm – 200.0 µS/cm	Limit 1: 10.00 µS/cm Limit 2: 190.0 µS/cm	0.1 nS/cm – 20.00 µS/cm	2.000 µS/cm	0.1 nS/cm – 200.0 µS/cm	10.0 µS/cm
k = 0.1	0 µS/cm – 2000 µS/cm	Limit 1: 100.0 µS/cm Limit 2: 1900 µS/cm	0.001 µS/cm – 200.0 µS/cm	20.00 µS/cm	0.001 µS/cm – 2000 µS/cm	100.0 µS/cm
k = 1	0 µS/cm – 20.00 mS/cm	Limit 1: 1000 µS/cm Limit 2: 19.00 mS/cm	0.01 µS/cm – 2000 µS/cm	200.0 µS/cm	0.01 µS/cm – 20.00 mS/cm	1000 µS/cm

8.2 Instruments with five contacts

→ Instrument data

→ Limit contactor

Function	Selection	Default
Select group	Limit configuration Alarm configuration Operating mode	Limit configuration
If „Limit configuration“		
Select limit contactor	Limit contactor 1 Limit contactor 2	Limit contactor 1
Switch on/off output	off, on	1: on 2: off
Limit	see Table “Cell dependence“ (S. 54)	
Hysteresis	see Table “Cell dependence“ (S. 54)	
Contact function	Min function Max function	1:Min function 2:Max function
On delay	0 ... 7200 s	0 s
Off delay	0 ... 7200 s	0 s
Contact type	NC contact, NO contact	NO contact
If „Alarm configuration“ selected		
Select alarm contact	Alarm 1 Alarm 2	Alarm 1
Alarm threshold	see Table “Cell dependence“ (S. 54)	
Alarm delay	0 ... 6000 s	0 s
If „Operating mode“		
Select limit contactor	Limit contactor 1 Limit contactor 2	Limit contactor 1
Switch over operating mode	Auto limit contactor 1 / 2 Manual limit contactor 1 / 2	Manual
Limit contactor manual mode (If „Manual")	off, on	off

Note:

With differential instruments (= differential measurement), all contact settings (limits, alarm, etc.) refer to the differential value, not to the absolute cond. value.

8.3 USP function (conductive)

→ Instrument data

→ USP contact

According to USP guidelines ("United States Pharmacopeia"), the Mycom CLM 152 can measure and monitor non-compensated conductivity.
The USP option meets the requirement both for performing a measurement and for monitoring deviations.

Monitoring is automatic and can be selected via the Instrument data menu. The user-selected setting for temperature compensation has no impact on the monitoring function.

Measurement requirement for USP

Proceed as follows to carry out the measurement:

Carry out a non-compensated measurement and compare the current measured value with a reference value (see Table) for pure water. If the measured value deviate upwards, an alarm is generated via the USP contact.

The measuring transmitter must meet the following USP requirements for a quasi substitute compensation:

- Temperature measurement at point of conductivity measurement
- Round off temperature to next 5 °C step
- Determine the valid monitoring value from a table (see Table below)
- Alarm is generated if limit is exceeded
- Measuring instrument must be able to measure uncompensated conductivity / resistance
- Accuracy 0.1 µS / cm determined with a simulation resistance with an accuracy of 0.1 %
- Maximum 2 % deviation of cell constant of sensor (requirement on the sensor)
- Adequate measuring range dynamics

Temperature [°C]	Conductivity [µS/cm]	Temperature [°C]	Conductivity [µS/cm]
0	0.6	55	2.1
5	0.8	60	2.2
10	0.9	65	2.4
15	1.0	70	2.5
20	1.1	75	2.7
25	1.3	80	2.7
30	1.4	85	2.7
35	1.5	90	2.7
40	1.7	95	2.9
45	1.8	100	3.1

The USP function can be activated from the Instrument data/USP menu.
After activation, you can make the following settings:

Function	Selection	Factory setting
On delay	0 ... 60 s	0 s
Hysteresis	Setting range sensor-dependent (see Table)	0 µS/cm

Cell	MR 1[1)]	MR 2[1)]	MR 3[1)]	MR 4[1)]
k = 0.01	0.0 ... 200.0 nS/cm	0.200 ... 2.000 µS/cm	2.00 ... 20.00 µS/cm	20.0 ... 200.0 µS/cm
k = 0.1	0.000 ... 2.000 µS/cm	2.00 ... 20.00 µS/cm	20.0 ... 200.0 µS/cm	200 ... 2000 µS/cm
k = 1	0.00 ... 20.00 µS/cm	20.0 ... 200.0 µS/cm	200 ... 2000 µS/cm	2.00 ... 20.00 mS/cm
k = 10	0.0 ... 200.0 µS/cm	200 ... 2000.0 µS/cm	2.00 ... 20.00 mS/cm	20.0 ... 200.0 mS/cm

[1)] The selection of measuring range is executed automatically with internal measuring steps to ensure optimum accuracy and resolution.

9 Calibration

9.1 Entering a code

Enter a code and confirm by pressing E to access the sub-levels of the menus. The levels are then enabled (see Chapter 6.6). You can select all the calibration functions using the repairman or the specialist code.

The system requests you to enter the code when you entered a repairman or a specialist code under Instrument data / System configuration.

9.2 Inductive calibration

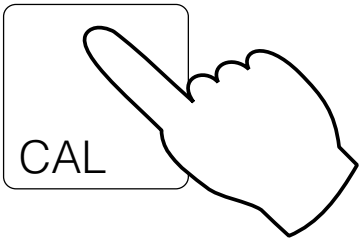

→ Enter cell constant ☞ 9.2.1
→ Determine cell constant ☞ 9.2.2
→ Enter adaptation factor ☞ 9.2.3
→ Determine adaptation factor ☞ 9.2.3

9.2.1 Entering the cell constant

Function	Selection	Default
Select sensor (not for single-circuit)	Sensor 1 Sensor 2	Sensor 1
Fine-adjust cell constant CLS 52	5.000 1/cm ... 7.000 1/cm	5.9 1/cm
Fine-adjust cell constant CLS 50	1.000 1/cm ... 3.000 1/cm	1.980 1/cm

When you select the corresponding sensor (CLS 50 or CLS 52) from the System configuration menu (see Chapter 7.1), a value for the cell constant is defaulted. However, you can still edit this value for fine adjustment.

Warning:

When the Chemoclean function is activated, the automatic cleaning function is disabled automatically with the start of calibration. It is re-enabled at the end of the calibration function.

9.2.2 Determining the cell constant

Measure the conductivity of a calibration solution (of precisely known conductivity) (see Chap. 3.7.2):
When you set the display to the conductivity of the calibration solution, the instrument then calculates the cell constant.
Proceed as follows:

- Select the sensor you want to calibrate (only for differential measurements)
- Clean the sensor
- Place the sensor and, if necessary, the temperature sensor in the calibration solution
- Start the calibration by pressing »E«
  ⇒ The measured value of the calibration solution is displayed
- Wait until the measured value stabilises
- Accept the measured value by pressing »E«
- Set the precise value of the calibration solution by pressing the arrow keys
- Confirm the input by pressing »E«
  ⇒ The calculated cell constant is displayed
- End the calibration or repeat the procedure

If you select »End cal.«, the cell constant just calculated is accepted and the system then switches to Measuring mode.

Note:

To carry out a high-precision calibration, the temperature influence of the temperature difference in relation to the reference temperature must be eliminated, i.e. calibration must take place at the reference temperature. If this is not possible, you can enter the calibration temperature and the Tc value of the calibration solution in the »Instrument data / Calibration« menu.

Note:

To measure the precise temperature, the temperature sensor must be checked and, if necessary, calibrated in the »Instrument data / Temperature«menu every time before the conductivity measurement is calibrated.

Function	Selection	Default
Select sensor (not for single-circuit)	Sensor 1 Sensor 2	Sensor 1
Message		Clean sensor and place in calibration solution
Display conductivity of calibration solution current Tc, temperature		
Enter setpoint of calibration solution	0 µS/cm ... 1000 mS/cm	current measured value
Display cell constant		x.xxx 1/cm
Calibrate	End Cal. Repeat Cal. Cal. channel 2 (only for difference)	End Cal.

Continued on next page

Table continued		
Function	Selection	Default
If »End Cal.« selected		
Return to Measuring mode		
If »Repeat Cal.« selected		
Calibrate Sensor 1 Return to Select sensor (above)		Sensor 1
If »Cal. channel 2" selected		
Calibrate sensor 2 Return to Select sensor (above)		Sensor 2

9.2.3 Adaptation factor

When installed in confined spaces, the sensor may be influenced through the pipe wall, resulting in inaccurate measurements.

This can be compensated for by entering an adaptation factor.

Entering the adaptation factor

Function	Selection	Default
Select sensor (not for single-circuit)	Sensor 1 Sensor 2	Sensor 1
Enter adaptation factor	0.001 ... 50.000	1.000

Remark: The adaptation factor for the CLS 52 sensor is for pipes ≥ DN 65 = 1 (all sensor versions)
Set an adaptation factor of 0.990 for DN 40 pipes
With CLS 50 a minimum pipe diameter of DN 80 is necessary, if the pipe diameter is less than DN 110 the adaption factor must be fitted

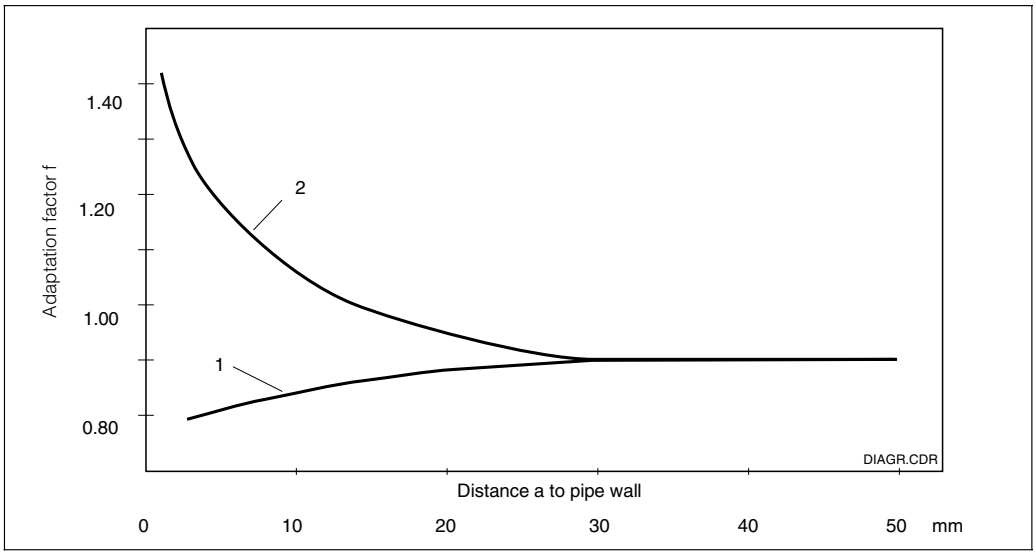

Fig. 9.1 Adaptation factor as factor of distance a to pipe wall
1: conductive pipe wall
2: insulating pipe wall

Determining the adaptation factor

Function	Selection	Default
Select sensor (not for single-circuit)	Sensor 1 Sensor 2	Sensor 1
Message		Leave sensor in process
Display conductivity of calibration solution current Tc, temperature		
Enter setpoint of calibration solution	0 µS/cm ... 1000 mS/cm	Current measured value
Display adaptation factor		xx.xxx
Calibrate	End Cal. Repeat Cal. Cal. channel 2 (only for difference)	End Cal.
If »End Cal.« selected		
Return to Measuring mode		
If »Repeat Cal.« selected		
Calibrate sensor 1 Return to Select sensor (above)		Sensor 1
If »Cal. channel 2« selected (only for difference)		
Calibrate sensor 2 Return to Select sensor (above)		Sensor 2

Note:

You can lead the air set in menu service / special function / optimisation

9.3 Conductive calibration

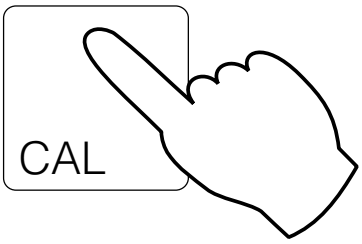

→ Enter cell constant ☞ 9.3.1
→ Determine cell constant ☞ 9.3.2

9.3.1 Numerical calibration by entering the cell constants

The cell constant is measured precisely at the factory and is entered directly in cm^{-1}. For differential measurements, enter the cell constant separately for each sensor.

Cell constant	Input range
0.01 cm^{-1}	0.0005 ... 0.0500 cm^{-1}
0.1 cm^{-1}	0.050 ... 0.500 cm^{-1}
1 cm^{-1}	0.500 ... 5.000 cm^{-1}
10 cm^{-1}	5.00 ... 99.99 cm^{-1}

9.3.2 Wet calibration for determining the recent cell constants

The conductivity of a calibration (at precisely known conductivity) is measured (for calibration solutions, see Chapter 3.7.2). The display is set to the conductivity of the calibration solution and the instrument then calculates the cell constant.
Proceed as follows:

- For differential measurements: Select the sensor for calibration
- Clean the sensor
- Place the sensor and, if necessary, the temperature sensor in the calibration solution
- Start the calibration by pressing »**E**«
- **Display measured value of calibration solution**, **ATC/MTC, Temp, Tc of calibration solution**
- Wait until the measured value stabilises
- Accept the measured value by pressing »**E**«
- **Set the setpoint**
  Set the precise value of the calibration solution by using the arrow keys, input range:

k = 0.01	0 – 200.0 µS/cm
k = 0.1	0 – 2000 µS/cm
k = 1	0 – 20.00 mS/cm
k = 10	0 – 200.0 mS/cm
k = 0.01	20 kΩ cm – 20.00 MΩ cm
k = 0.1	2.00 kΩ cm – 2000 kΩ cm
k = 1	0.200 kΩ cm – 200.0 kΩ cm

- Confirm entry by pressing »**E**«
- **Display calculated cell constant**
- End or repeat calibration

If you select »End cal.«, the new cell constant calculated is accepted and the system switches to Measuring mode.

Note:

To carry out a high-precision calibration, the temperature influence of the temperature difference in relation to the reference temperature must be eliminated, i.e. calibration must take place at the reference temperature. If this is not possible, you can enter the calibration temperature or the Tc value of the calibration solution in the »Instrument data / Calibration« menu.

To measure the precise temperature, the temperature sensor must be checked and calibrated in the »Instrument data / Temperature« menu every time before the conductivity measurement is calibrated.

Warning:

When the Chemoclean function is activated, the automatic cleaning function is disabled automatically with the start of calibration. It is re-enabled at the end of the calibration function.

10 PROFIBUS® interface

10.1 FCYP module

In the simplest case, the complete measuring cell consists of the Mycom CLM 152 and the FCYP module (see Chapter 4, Fig. 4.12), a bus coupler, a PLC or a PC with the Commuwin II operating system and a PROFIBUS-PA terminating resistor.

The maximum number of measuring transmitters in one bus segment is determined by their current drain, the performance of the bus coupler and the necessary bus length, see TI 260F/00/en. Normally, you can operate a maximum of 32 Mycom CLM 152 instruments in non-Ex applications in one bus segment.

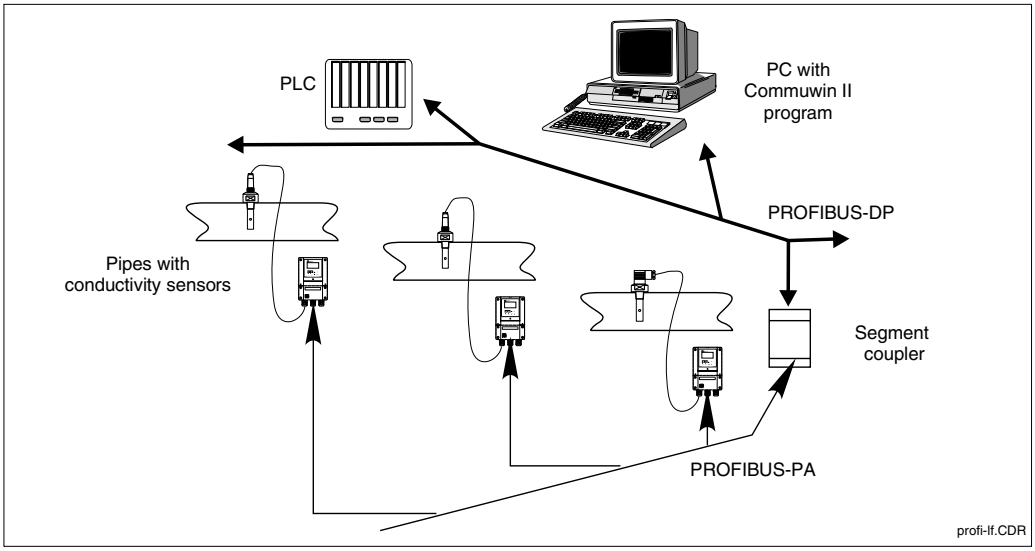

Fig. 10.1 Mycom CLM 152 measuring transmitter with PROFIBUS-PAprotocol

10.2 Bus cable

Screened, twisted-pair cable should be used in new installations (e.g. Belden 3097A, Siemens 6xV 1830-5AH10). The FISCO model (explosion protection) stipulated the following characteristics:

- Loop impedance (DC): 15 ... 150 Ω/km,
  Inductance/unit length: 0.4 ... 1 mH/km,
  Capacitance/unit length: 80 ... 200 nF/km

Please refer to TI 260F/00/en Project panning notes for PROFIBUS-PA and the PROFIBUS-PA specification for information on setup and network earth.

Cable connection

The bus line also carries the auxiliary energy for the PROFIBUS® plug-in card and is connected as follows:

- Insert cable through cable entry (e.g. Beldon 3097A, Siemens 6xV 1830-5AH10)
- Connect bus cable to terminals (see Fig. 4.12)
  Terminal 99 PA+
  Terminal 98 PA-
  (Polarity reversal has no effect on operation.)
- Connect screen to internal earthing terminal
- Connect external earthing terminal to potential matching line.

Caution:

Multiple earthing of the protective screen in explosion protection applications is only permissible in special cases.

10.3 Bus address

Every instrument is assigned a unique bus address:

➜ set address (1 to 126) at switches 1-7
➜ Set switch 8 to OFF:
The address set on the DIL switches 1-7 is valid.
➜ Set switch 8 to ON: (default)
The address set in the control menu or via the interface is valid.

Setting the PROFIBUS® address (menu selection):

- Param (Specialist)
- Instrument data
- System configuration
- General settings

General settings ➜ PROFIBUS® address (default 126)

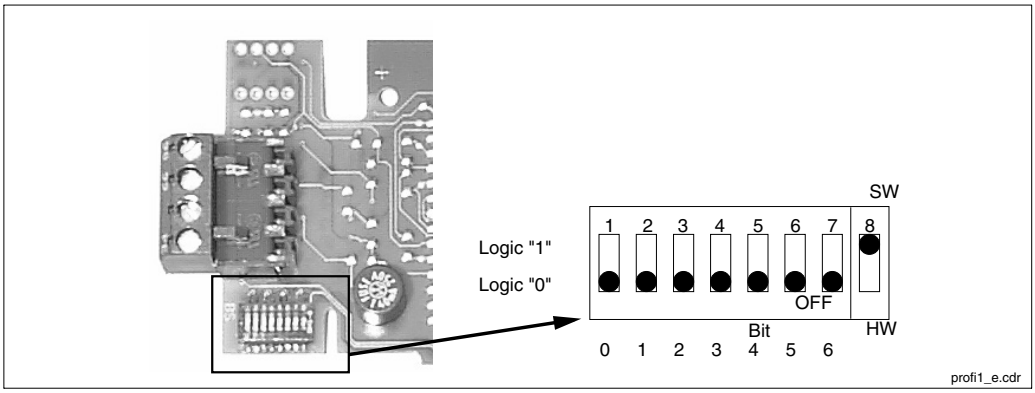

Fig. 10.2 Detail of PROFIBUS® card in Mycom with view of address 126 (software address in factory setting)

Address examples

Factory setting
Software address (SW)
(default: 126_d)
(Hardware setting is ignored!)

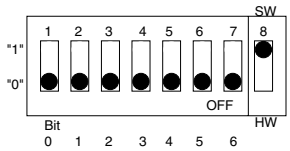

Software address
(default: 126_d)
(Hardware setting 2d is ignored!)

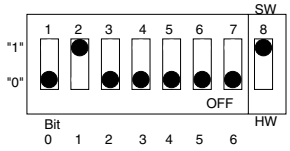

Hardware address (HW)
Address: 2_d

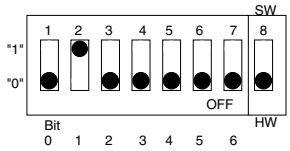

Hardware address
Address: 6_d

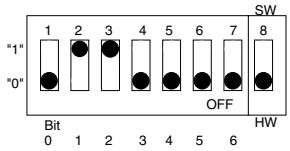

Hardware address
Address: 64_d

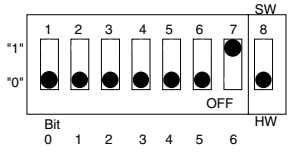

Software address
Address: 126_d
(default after switch-over from HW to SW)

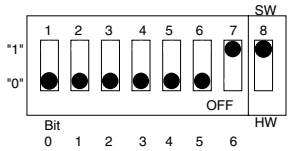

10.4 Device master file / Type file

Device master files are required to use the PROFIBUS®. They must be created as Siemens TYP files. The data must be loaded into the communication partner (Siemens operating system COMET 200 or COM PROFIBUS®) before the bus system is started up. The data is stored as follows:

- all *.200 files in type file directory e.g. ***\TYPDAT5X
- all *.GSD files in instrument master file directory e.g. ***\GSD
- all *.BMP files in bitmap directory e.g. ***\BITMAPS

The meanings of the individual device parameters are contained in the PROFIBUS-PA specification.

The device master files are provided on the disk:

- Disk containing PROFIBUS-PA device files (Order No. 943157-0000) (or: www.endress.com > Products / Download Street / Field Communication St.)

10.5 Remote control with Commuwin II

PROFIBUS-PA devices can be operated via the Commuwin II operating system (Version 1.5 or higher). A description of how to operate Commuwin II is contained in the Operating Instructions BA 124F. The settings are made with via the operating matrix (Fig. 10.3) or the graphical user interface (Fig. 10.4).

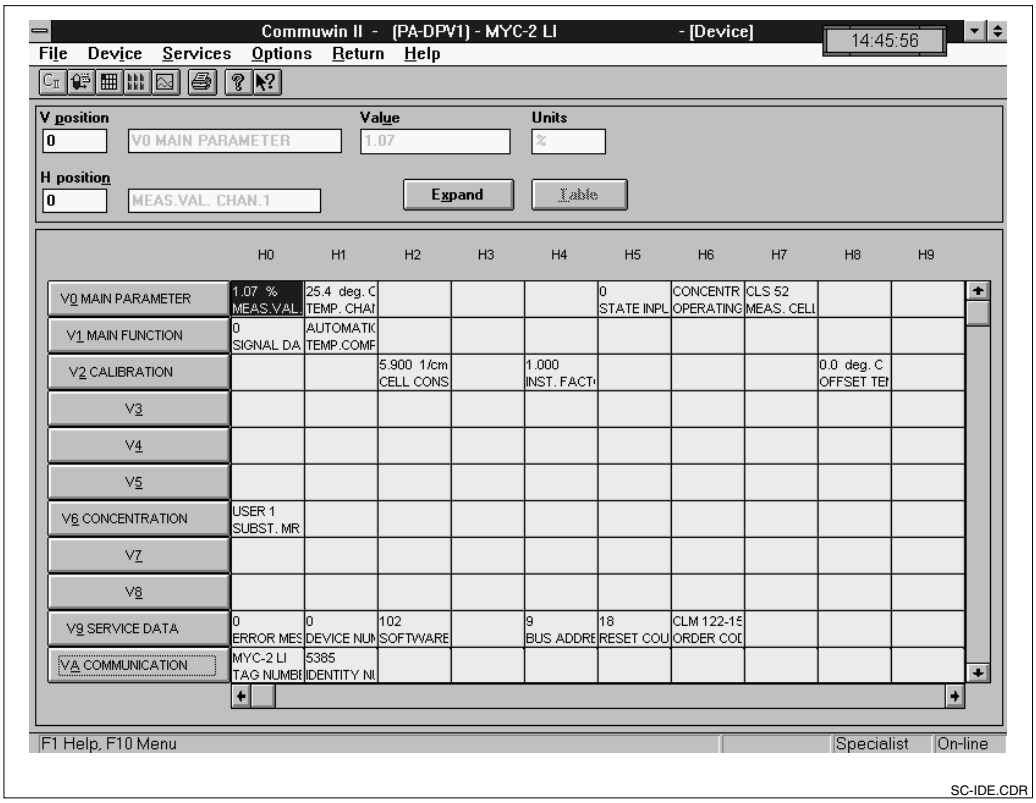

Fig. 10.3 Instrument data menu under Commuwin II (conductive)

Note:

When communication is active, a double-arrow (<=>) appears in the top line of the device display.

Establishing the connection

Remote control requires the installation of the PROFIBUS-PA server. The PC must also be equipped with a PROFIBUS-PA card:

- The connection to Commuwin II is set up via the PROFIBUS-PA server.
- All the devices appear in the device list connected to the segments selected
- The settings are made in the Instrument data menu.
- PROFIBUS-PA parameters can also be displayed or set using the graphical user interface.

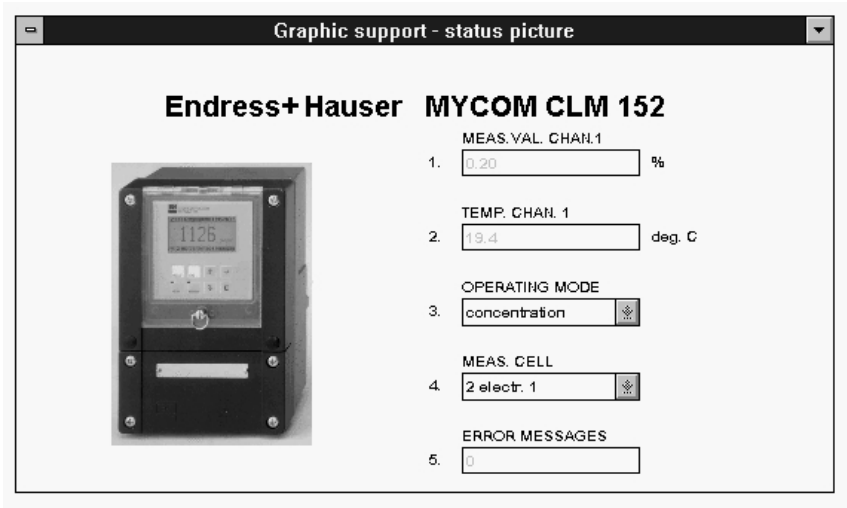

SC-IDE2.CDR

Fig. 10.4 Graphical user interface of Commuwin II

10.6 System integration via PLC

The Mycom CLM 152 measuring transmitter supplies measured values (OUT) cyclically using the PROFIBUS-PA protocol. Other PROFIBUS-PA parameters are provided using the acyclical service.

	Command	Type	Function
Module 1	OUT	Read	Current measured value of process variable in mS/cm, kΩ cm or % and related status - Status = 80 $_{Hex}$, Instrument OK - Status = 0C $_{Hex,}$ Warning or alarm present. Information is transferred byte by byte in 5 bytes which contain the status information.
Module 2	OUT	Read	Current measured value of process variable in °C and related status - Status = 80 $_{Hex}$, Instrument OK - Status = 0C $_{Hex,}$ Warning or alarm present. Information is transferred byte by byte in 5 bytes which contain the status information.

Two modules are provided for data exchange with the PLC and they transfer together:

- Module 1: main measured value
- Module 2: temperature measured value

Data format OUT

Byte	Date	Data format
1	Measured value	IEEE 754 floating point number (format always mS/cm; kΩ cm or %)
2	Measured value	
3	Measured value	
4	Measured value	
5	Instrument status	80_{Hex} = Instrument OK $0C_{Hex}$ = Fault (alarm present)
6	Measured value	IEEE 754 floating point number (°C)
7	Measured value	
8	Measured value	
9	Measured value	
10	Instrument status	80_{Hex} = Instrument OK $0C_{Hex}$ = Fault (alarm present)

IEEE 754 floating point number

D15	D14	D13	D12	D11	D10	D9	D8	D7	D6	D5	D4	D3	D2	D1	D0
VZ	Exponent (E)								Fraction (F)						
	2^7	2^6	2^5	2^4	2^3	2^2	2^1	2^0	2^{-1}	2^{-2}	2^{-3}	2^{-4}	2^{-5}	2^{-6}	2^{-7}
Fraction (F)															
2^{-8}	2^{-9}	2^{-10}	2^{-11}	2^{-12}	2^{-13}	2^{-14}	2^{-15}	2^{-16}	2^{-17}	2^{-18}	2^{-19}	2^{-20}	2^{-21}	2^{-22}	2^{-23}

10.7 PROFIBUS-PA parameters

Parameter	Matrix VH	Index (Slot = 1)	Data type	Read	Write	Data length
Composite List Directory	-	1	Octet String	yes		24
DEVICE_ID	V99H0	25	Octet String	yes		16
Actual Error	90	52	Unsigned 16	yes		2
Device Bus Address	94	57	Integer 8	yes		1
Main measured value	00	108	Float	yes		4
Temp. measured value	01	109	Float	yes		4
Ext. binary input	05	110	Unsigned 8	yes		1
Operating mode	06	111	Unsigned 8	yes		1
Measuring cell	07	112	Unsigned 8	yes		1
Input damping	10	113	Unsigned 8	yes	yes	1
Set ATC/MTC	11	114	Unsigned 8	yes	yes	1
MTC temperature	13	115	Float	yes	yes	4
Cell constant	22	116	Float	yes		4
Adaptation factor	24	117	Float	yes	yes	4
Temp. offset	28	118	Float	yes		4
Select substance MR 1	60	119	Unsigned 8	yes	yes	1
Select substance MR 2	61	120	Unsigned 8	yes	yes	1
Select substance MR 3	62	121	Unsigned 8	yes	yes	1
Select substance MR 4	63	122	Unsigned 8	yes	yes	1
Instrument number	91	123	Unsigned 32	yes		4
Software version	92	124	Unsigned 16	yes		2
Reset counter	95	125	Unsigned 8	yes		1
SAP code	96	126	Octet String	yes		18
Measuring point description	A0	127	Octet String	yes	yes	32
PNO ID number	A1	128	Unsigned 16	yes		2

11 Instrument diagnostics

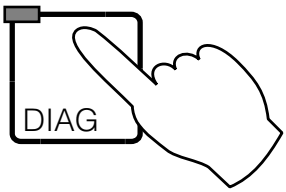

11.1 Error classification

A distinction is made between two error states:

- active –cause of error is acute
- inactive –cause of error no longer exists

When an error is active, the LED in the DIAG key lights up red; if there is no active error, the light is green.

Errors are divided into four error classes depending on their priority:

Priority	Error number	Impact
Failure	E001 ... E018	• Failure contact active • Error current at current outputs 1 and 2 (as set, see Chapter 7.2) • Limit contactor output contacts passive (NO contact open, NC contact closed) • DIAG LED red
Maintenance required	E036 ... E052	• Maintenance required contact active if set in “System configuration/ Output contacts” • DIAG LED red
Fault in process	E055 ... E078	• Maintenance required contact active if set and fault allocation to maintenance required selected • DIAG LED red
Warning	E080 ... E151	• DIAG LED red

11.2 Error list and error log

Error list

The instrument manages up to 30 active errors in a list. The error with the highest priority is at the top of the list. When the list overflows, the error with the lowest priority is deleted. The error is displayed in plain text; in addition the error number, date and time of occurrence.

Use the ↓ and ↑ keys to browse through the list of entries.
You cannot change or delete the entries in the error list. If the error is no longer acute, it is automatically removed to the error log.

Error log

After you press E, you exit the error list and access the error log.
The error log contains every activation and deactivation of an alarm with the time and date in chronological order in a list contained up to 50 entries. Use the ↓ and ↑ keys to browse through the list of entries. You cannot change or delete the entries in the error list. If the list overflows, the oldest entry is deleted.
After a power failure, only the 10 most recent entries in the error log are retained.
Press on the E key again to return to the „Diagnostics“ menu.

11.3 Error table

Failure		
No.	Display	Corrective action
E001	Fault in internal communication	Send instrument to Endress+Hauser agency responsible for repair or call Service. If error »07« occurs at the same time, check transmitter acc. to this error.
E002	Data error in EEPROM	
E003	Invalid configuration	Check configuration of slots
E004	Changed configuration	Accept new configuration using “Set config” in “Service / Factory settings” menu
E005	Unknown card code	Check configuration of slots
E006	Checksum error in EEPROM	Carry out checksum correction in “Special functions”
E007	Transmitter faulty or transmitter function disturbed	Check sensor connection • Check if measuring range is exceeded • Check on exceeded sensor cross-talk • Check temperature measurement. If temperature measurement is not in order, replace the module
E010	Temperature sensor defective	Check temperature measurement and terminals; poss. check measuring transmitter and measuring cable with temperature simulator
E011	Temperature sensor 2 defective	
E015	Current loop 1 open	Check terminals, lines and poss. connected devices
E016	Current loop 2 open	
E017	Sensor error *(inductive only)*	Send sensor to your Endress+Hauser agency for examinaton or request Service
E018	Sensor error channel 2 *(inductive only)*	
Maintenance required		
E036	Calibrating range of sensor 1 exceeded	Recalibrate sensor; poss. check sensor and terminals; check measuring transmitter and measuring cable with CD simulator
E037	Calibrating range of sensor 1 undershot	
E038	Calibrating range of sensor 2 exceeded	
E039	Calibrating range of sensor 2 undershot	
E040	TC table invalid	Correct temperature compensation table; check temperature measurement and terminals; poss. check measuring transmitter and measuring cable with temperature simulator
E041	Substance table invalid	correct substance table
E049	Adaptation factor range of sensor 1 exceeded	Enlarge the distance of sensor from wall
E050	Adaptation factor range of sensor 1 undershot	Enlarge the distance of sensor from wall
E051	Adaptation factor range of sensor 2 exceeded	Enlarge the distance of sensor from wall
E052	Adaptation factor range of sensor 2 undershot	Enlarge the distance of sensor from wall

Faults		
No.	Display	Corrective action
E055	Display range of undershot	Check measurement, control and terminals, poss. check measuring transmitter and measuring cable with simulator. With inductive sensor and error »... undershot«: perform an Air Set
E056	Display range of 2 undershot	
E057	Display range of exceeded	
E058	Display range of 2 exceeded	
E059	Temperature range undershot	
E060	Temperature range 2 undershot	
E061	Temperature range exceeded	
E062	Temperature range 2 exceeded	
E063	Current limiter 0/4 mA output 1	Check configuration in „Current outputs“ menu; Check measurement, control and terminals, poss. check measuring transmitter and measuring cable with simulator
E064	Current limiter 20 mA output 1	
E065	Current limiter 0/4 mA output 2	
E066	Current limiter 20 mA output 2	
E067	Limit 1 exceeded	Check configuration in “Limit contactor” menu; Check measurement, control and terminals, poss. check measuring transmitter and measuring cable with simulator
E068	Limit 2 exceeded	
E069	Current table incorrect	Correct current table see freely selectable current output characteristic p. 45
E070	Polarisation error *(conductive only)*	*Message character only, no effect on measured value processing*
E071	Polarisation error sensor 2 *(conductive only)*	
E073	TC range undershot	Check configuration in “Temperature”; check temperature measurement and terminals; poss. check measuring transmitter and measuring cable with temperature simulator
E074	TC range channel 2 undershot	
E075	TC range exceeded	
E076	TC range channel 2 exceeded	
E077	Temperature outside TC table range	Check temperature compensation table and poss. correct, check temperature measurement and terminals; poss. check measuring transmitter and measuring cable with temperature simulator
E078	Temperature 2 outside TC table range	

Continued on next page

Warnings		
No.	Display	Corrective action
E080	Range for current output 1 too small	Enlarge range in “Current outputs”
E081	Range for current output 2 too small	
E142	Knee point outside current output range 1	Correct cnfiguration in “Current outputs”
E143	Knee point outside current output range 2	
E144	Current output range 1 too small for selected MR (= measuring range)	Make range in “Current outputs” menu larger
E145	Current output range 2 too small for selected MR (= measuring range)	
E148	Knee point outside current output range 1 (MBX = current measuring range)	Correct configuration in “Current outputs” menu
E149	Knee point outside current output range 2 (MBX = current measuring range)	
E150	Measured value outside USP table	
E151	Temperature outside limits for USP table	

11.4 Information list / Logbook

11.4.1 Information list

The “Information list” menu option displays two information windows one after the other. The first window lists when the instrument was started, its name and the number of output contacts. Press E to continue to the second information window, the logbook.

11.4.2 Logbook

The “logbook” contains a list of the 30 last operating events with the date and time. The most recent event is listed first. When the list overflows, the last entry is deleted. The following data is listed:

- all changes to the configuration
- all simulations (non-specific)

11.5 Air set information (only on inductive models)

The field air set information shows you important information relating to the last air-set calibration.

- Time / Date
- Calibration status
- Type of air-set calibration

On the differential instrument, there is Air Set information for each sensor.

11.6 Calibration history

The Mycom CLM 152 measuring transmitter provides access to automatically recorded logs under the „Diagnostics“ and „Calibration history“ menu options which are a convenient way of assessing sensor status.

The last 5 calibration events are recorded and they contain the following information:

- Date/time
- Cell constant
- Adaptation factor

For determining wet calibration:

- Tc value
- Cond. measured value
- Temperature

Caution:

When you change the operating mode or reset the instrument with “Default calibration data”, the calibration history is completely deleted!

Note:

On the differential instrument there is a calibration history for each sensor.

11.7 Service

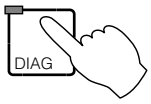

→ Service
- → Simulation ☞ 11.7.1
- → Internal data ☞ 11.7.2
- → Factory settings ☞ 11.7.3
- → Instrument check ☞ 11.7.4
- → Special functions ☞ 11.7.5

11.7.1 Simulation

Function	Selection
Set present current value at current output 1	0.00...22.00 mA
Set present current value at current output 2	0.00...22.00 mA
Set current relay states (The number of contacts displayed is dependent on the instrument expansion level and configuration)	Select contact by pressing ↑ and ↓. Open / close selected contact by pressing →.
Measured value simulation Main measured value	Free setting across configured measuring range (sensor independence) Change current outputs and relay states depending on their configuration
Measured value simulation Temperature	–35.0 ... +250.0 °C The current output changes depending on its configuration

Note:

In the „Simulation“ menu the displayed value for current output or the displayed relay state is immediately displayed. If you change the value in the window, the current output or the relay state changes at the same time. If you exit the window, the simulation is deactivated and the current outputs and relay states are reset to the current values.

11.7.2 Internal data

Function	Selection
Display instrument number	No selection
Display software version of instrument	No selection
Display software version of FCL1 module (CD signal processor) channel 1	No selection
Display software version of FCL1 module channel 2 (for difference)	No selection
Display hardware configuration in several consecutive windows: module, installation date, slot assignment	No selection
Order Code	Alphanumeric entry with characters 0 ... 9 and a ... Z
Reset counter	0 ... 255 display only

11.7.3 Factory settings

Function		Selection
Factory settings (instrument reset)		Abort set config (accept changed slot assignment), setting data only, calibration data only, all data, (Service data, logbook, reset counter, message log ⇒ only for authorised service personnel, only with service code)
	set config	After pressing E the hardware equipment is checked and a changed slot assignment accepted.
	Only reset setting data	After pressing E to reset all setting data for instrument configuration to factory settings. **Caution:** **All previous data for instrument configuration are lost!**
	Reset only calibration data	After pressing E to reset all setting data for instrument configuration to factory settings. **Caution:** **All previous calibration data are lost!**
	Reset all data	After pressing E, configuration and calibration data are reset to factory settings. **Caution:** **All previous data for configuration and calibration are lost!**

Caution:

If the calibration data are reset, you must carry out a recalibration of the measuring system.

11.7.4 Instrument check

Function		Description
Test type		Selection: keypad, LCD, RAM, EPROM, EEPROM
	Keypad	Graphical display of keypad. Press all keys in succession. If the key function is in order, a message appears in the LCD. Press E to return to the Test type selection menu.
	Display	A chessboard pattern is displayed in normal and inverse video. Check the display for missing pixels. Press E to return to the “Test type selection menu”.
	RAM	Self-test. On expiry of test time, the result is displayed. Press E to return to the “Test type selection menu”.
	EPROM	
	EEPROM	

11.7.5 Special functions

Function	Description
Select special functions	Optimisation, Checksum correction, Reset
If “Optimisation” selected	
Determine temperature coefficient	Measure temperature coefficient Tc of a measuring medium.
Request sample 1	Immerse sensor and temperature sensor in medium sample. The sample temperature should be as close as possible to the reference temperature used.
Measure conductivity and temperature	Press E key when both values have stabilised.
Request sample 2	Heat sample to at least 10 Kelvin. Immerse sensor and temperature in sample. While heating the water in the sample must not evaporate. Else the concentration in the sample increases and the measured conductance is wrong.
Measure conductivity und temperature	Press E key when both values have stabilised.
Display temperature coefficient	Note down result for later use. The measured Tc value has no impact on internal measured value processing
Only inductive	
Carry out air set calibration (with difference, carry out for each cahnnel separately)	
Sensor prepration	Remove sensor from medium, clean and hold in air
Calibration in air	Measured value checked for stability → automatic continue
Air set information	Determine air set OK / NOK
Enter air set value	

	Air set value channel 1	Current air set value 0 µS/cm (default) Editing limits: CLS 52: – 600.0 ... 600.0 µS/cm CLS 50: – 200.0 ... 200.0 µS/cm
	Air set channel 2 (only for difference)	Current air set value 0 µS/cm (default) Editing limits: CLS 52 – 600.0 ... 600.0 µS/cm CLS 50 – 200.0 ... 200.0 µS/cm
Only conductive		
Carry out Cable resistance measurement (for difference, carry out for each channel separately)		
	Preparation	Disconnection sensor and connect simulation resistance
	Enter simulation resistance	0.00 ... 20.00 Ω
	Measurement running	Measuring cable resistance
	Display cable resistance	
Enter cable resistance		
	Cable resistance channel 1	Current cable resistance is displayed Editing limits: 0.00 ... 35.00 Ω
	Cable resistance channel 2 (only for difference)	Current cable resistance is displayed Editing limits: 0.00 ... 35.00 Ω
If “Checksum correction” selected		

Note:

Using the air set calibration function, you can carry out a zero point calibration of a connected sensor. You can carry out the calibration for Channel 1 and Channel 2 separately (on the differential instrument).
To perform the calibration, remove the sensor from the measurement solution, clean it and hold it in air without any contact too the liquid.
The Mycom CLM 152 measuring transmitter then checks the stability of the measured value. When stability is reached, the current value is saved.
This air set value is then transferred to the standard measured value calculation.
Reset the air set value by using “Service data default”!

Note:

The current cable resistance is deleted with Set Default “calibration data”.

12 Maintenance and service

12.1 Cleaning

We recommend the use of non-abrasive neutral cleaning agents to clean the keypad and housing.

Caution:

We shall accept no liability if you use concentrated acids or bases, benzyl alcohol, methylene chloride or high-pressure steam.

12.2 Replacing a defective fuse

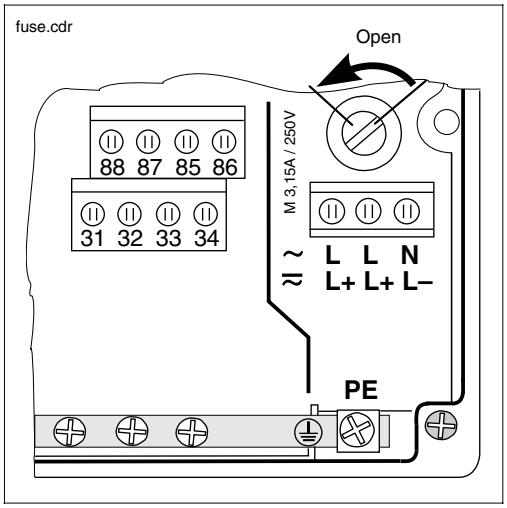

Fig. 12.1 Fuse holder in non-Ex version

Non-Ex version:

Open fuse holder using screwdriver in the direction of the arrow (see Fig. 12.1) and replace the defective fuse for one of type M 3.15 A / 250 V.

Ex version:

Only authorised service personnel may replace the fuse module.

Order No.:

50076930	100 V ... 230 VAC
50076931	24 VAC
50087807	24 VDC

12.3 Repairs

Repairs may only be carried out directly by the manuafacturer or by the Endress+Hauser Service Organisation.
A list of Endress+Hauser service agencies can be found on the back page of this manual.

13 Appendix

13.1 Technical data

13.1.1 Technical data, inductive

Sensor independent data

Measuring range	non-compensated
Measuring range	compensated
Measurement deviation[1)]	±0,5 % of measured value ± 3 digits
Reproducibility [1)]	±0,2 % of measured value ± 3 digits
Cable length	max. 55 m (with VBM junction box)
Current output transfer characteristic	linear, bilinear

Specifications subject to change

CLS 50 sensor data

General data	Lower measuring range limit	0 µS/cm ... 2000 mS/cm
	Cell constant	1.98 cm^{-1}
	Storage temperature	–20 ... +80 °C
	Protection type (DIN 40050)	IP 67
	Measurement deviation at –20 ... +100 °C	± (5 µS/cm +0.5 % MR)
	Measurement deviation > 100 °C	± (10 µS/cm +0.5 % MR)
Temperature measurement	Temperature measurement sensor	Pt 100, Class A as per IEC 751
	Temperature response time T_{90}	90 % of final temperature display: 10-15 min (as per DIN 746-1)
Installation	Required pipe cross-section	> DN 80 (for pipe diameters < DN 110, note adaptation factor)
	Installation in reduced outflow	≥ DN 50
Supplementary documentation	Technical Information CLS 50	order no. 50090385

Specifications subject to change

1) As per IEC 746-1; at rated operating conditions

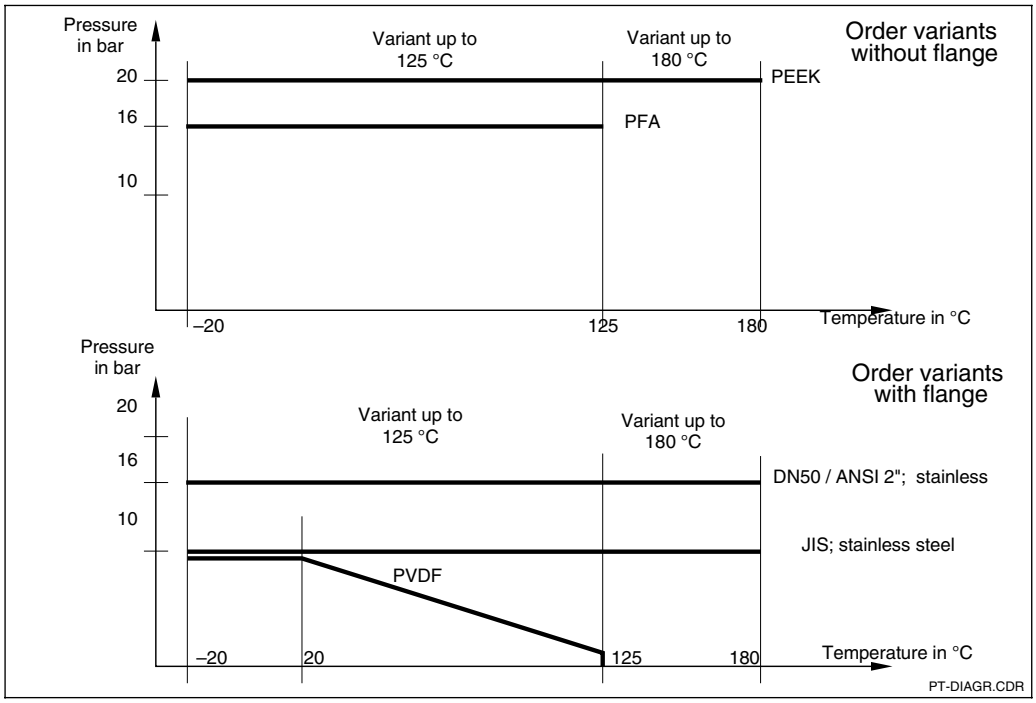

Fig. 13.1 Pressure vs temperature curves as a factor of material and flange variants

CLS 52 sensor data

General data

Lower measuring range limit (non-compensated)	0 µS/cm ... 2000 mS/cm
Reaction time (T_{90})	< 3 seconds over total measuring range (single-circuit instrument)

Temperature measurement

Temperature sensor	Pt 100 Class A as per IEC 751
Temperature response time	t_{90} ... < 15s
Heat transfer bushing with Pt 100	
Material	V4A (1.4571)
Seal	O-ring, EPDM

Cell constant k (measurement deviation) ±0.5 %)	5.9 cm^{-1}
Storage temperature	–25 ... +80 °C
Protection type (DIN 40050)	IP 67
Measurement deviation (–5 ... +100 °C)	± (10 µS/cm + 0.5 % MR)
Measurement deviation (+100 ... +140 °C)	± (30 µS/cm + 0.5 % MR)
Medium temperature	–5 ... +125 °C
Ambient temperature	–10 ... +70 °C
for sterilisation	+140 °C (max. 30 min)
Pressure	max. 16 bar (90 °C)
Measuring sensor material	PEEK
Surface roughness	Ra ≤ 0.5 µm

Installation

Required pipe cross-section	
Dairy pipe fitting, clamp nozzle G 1½	[3] DN 65
APV, Varivent connection	≥ DN 40

Supplementary documentation

Technical Information CLS 52	order no. 50086110

Specifications subject to change

13.1.2 Technical data, conductive

Conductivity / resistance / concentration measurement

Measuring and display ranges for conductivity		
Cell constant k	**Measuring range (MR) 1)**	**Display range (DR)**
0.01 cm^{-1}	0.0 nS/cm ... 600.0 µS/cm	0.0 µS/cm ... 200.0 µS/cm
0.1 cm^{-1}	0.000 µS/cm ... 6000 µS/cm	0.000 µS/cm ... 2000 µS/cm
1.0 cm^{-1}	0.00 µS/cm ... 400.0 mS/cm	0.00 µS/cm ... 200.0 mS/cm
10 cm^{-1}	0.0 µS/cm ... 600.0 mS/cm	0.0 µS/cm ... 200.0 mS/cm

Measuring and display ranges for resistance		
Cell constant k	**Measuring range (MR)**	**Display range (DR)**
0.01 cm^{-1}	20.0 kΩcm ... 20.00 MΩ cm	20.0 kΩcm ... 37.99 MΩ cm
0.1 cm^{-1}	2.00 kΩcm ... 2000 kΩ cm	2.00 kΩcm ... 3799 kΩ cm
1 cm^{-1}	0.200 kΩcm ... 200.0 kΩ cm	0.200 kΩcm ... 379.9 kΩ cm

Measurement deviation 2) in display	±0.5% ±2 digits of measured value
Reproducibility 2)	±0.2% ±2 digits of measured value
Reference temperature	adjustable –35 ... +250 °C, typ. +25 °C
Measuring frequency	128 ... 1024 Hz
Measuring voltage	≤ 300 mV
Maximum cable length at MΩ	approx. 20 m
Maximum cable length at cond./concentration	approx. 100 m

Supplementary documentation

Technical Information CLS 12	order no. 50059349
Technical Information CLS 13	order no. 50059350
Technical Information CLS 15	order no. 50065950
Technical Information CLS 19	order no. 50065951
Technical Information CLS 21	order no. 50059352
Technical Information CLS 30	order no. 50059353

Specifications subject to change

1) The instrument has four internal switching stages in each measuring range. This achieves maximum precision and resolution automatically.
2) as per IEC 746 Part 1, at nominal operating conditions

13.1.3 Technical data of PROFIBUS-PA

Output parameters

Output signal	Digital communication signal, PROFIBUS-PA
PA function	Slave
Response time Slave	approx. 20 ms
PLC	approx. 600 ms at approx. 30 instruments
Alarm signal	PROFIBUS-PA: signal status bit is set, last valid measured value is retained
Integration time	0 ... 99 s, default 0 s
Communication resistance	none, separate PROFIBUS-PA terminating resistance
Physical layer	IEC 1158-2
Integrated overvoltage protection	25 VAC / 250 A

Display and user interface

Remote operation	via PROFIBUS-PA using Commuwin II program
Communication point	PROFIBUS-PA

Power supply

Supply voltage	9 ... 32 VDC
Current drain	11 mA ± 1 mA
Inrush current	corresponds to Table 4, IEC 1158-2

Specifications subject to change

13.1.4 General technical data

General data

Manufacturer	Endress+Hauser
Instrument name	Mycom CLM 152

Limit and alarm functions

Function	Limit contactor
Function type	MIN or MAX
Setpoint settings (in absolute values)	0 ... 100 % of display range
Hysteresis for switch contacts (in absolute figures)	1 ... 10 % of display range
On / off delay	0 ... 7200 s
Alarm threshold	0.5 ... 100 % of display range
Alarm delay	0 ... 6000 s

Electrical connection data

Power supply AC	24 / 100 / 115 / 200 / 230 V +10 / –15 %
Frequency	47 ... 64 Hz
Power supply DC	24 V, +20 / –15 %
Power consumption	max. 10 VA
Contact outputs (optional)	Floating change-over contacts (Ex version: optocoupler) switchable as NO or NC contact
Switching current	max. 3 A
Switching voltage	max. 250 VAC / 125 VDC
Switching power	max. 750 VA
Signal outputs	2 x 0 / 4 ... 20 mA, electrically isolated from other circuits, but not between outputs
Isolation voltage	276 V_{rms}
Current output	
Current range	0/4 ... 20 mA
Measurement deviation	≤ 0.2 % of upper range value
Load	max 600 Ω
Terminals, maximum cable cross-section	2,5 mm^2

Temperature measurement

Temperature sensor	Pt 100 (three-wire circuit)
Measuring range (MR, also displayable in °F and K)	–35 ... +250 °C
Measured value resolution	0.1 °C
Measurement deviation at temp. output (as per IEC 746)	0 ... 100 °C: ± 0.5 K; remaining range: ± 1 K
Reproducibility	max. 0.1 % of MR
Temperature signal output transfer range	adjustable Δ 28.5 ... Δ 285 °C

Concentration measurement

Selection	Conductivity range	Concentration
NaOH	0.0 mS/cm ... 410 mS/cm	0 ... 15%
HNO_3	0.0 mS/cm ... 781 mS/cm	0 ... 20 %
H_2SO_4	0.0 mS/cm ... 723 mS/cm	0 ... 20 %
H_3PO_4	0.0 mS/cm ... 73 mS/cm	0 ... 12 %
USER 1 ... 4 [2)]	0.0 µS/cm ... 2000 mS/cm	0 ... 99.99 %

Specifications subject to change

Temperature compensation	Range for linear and freely programmable T_c values	–35 ... 250 °C
	Range for NaOH	0 ... 85.0 °C
	HNO_3	0 ... 75.0 °C
	H_3PO_4	0 ... 75.0 °C
	H_2SO_4	0 ... 80.0 °C

General technical data (continued)

Ambient conditions	Electromagnetic compatibility (EMC)	
	Emitted interference, Immunity to interference	as per EN 61326-1 / 01.98
		as per EN 61326-1 / 01.98
	Nominal operating conditions	
	Ambient temperature	–10 ... +55 °C **(Ex: –10 ... +50 °C)**
	Relative humidity	10 ... 95% non-condensing
	Limit operating conditions	
	Ambient temperature	–20 ... +60 °C **(Ex: –10 ... +50 °C)**
	Storage and transport temperature	–25 ... +85 °C **(Ex: –25 ... +75 °C)**
	Ex permit	EEx em [ia/ib] IIC T4
	Ex conformity certificate	BVS 95.D.2098; ASEN 96.1 10489

Specifications subject to change

Electrical connection data for the intrinsically safe circuits see Chapter 4.4.2.

13.2 Connection examples inductive

13.2.1 Base-acid recycling with concentration measurement

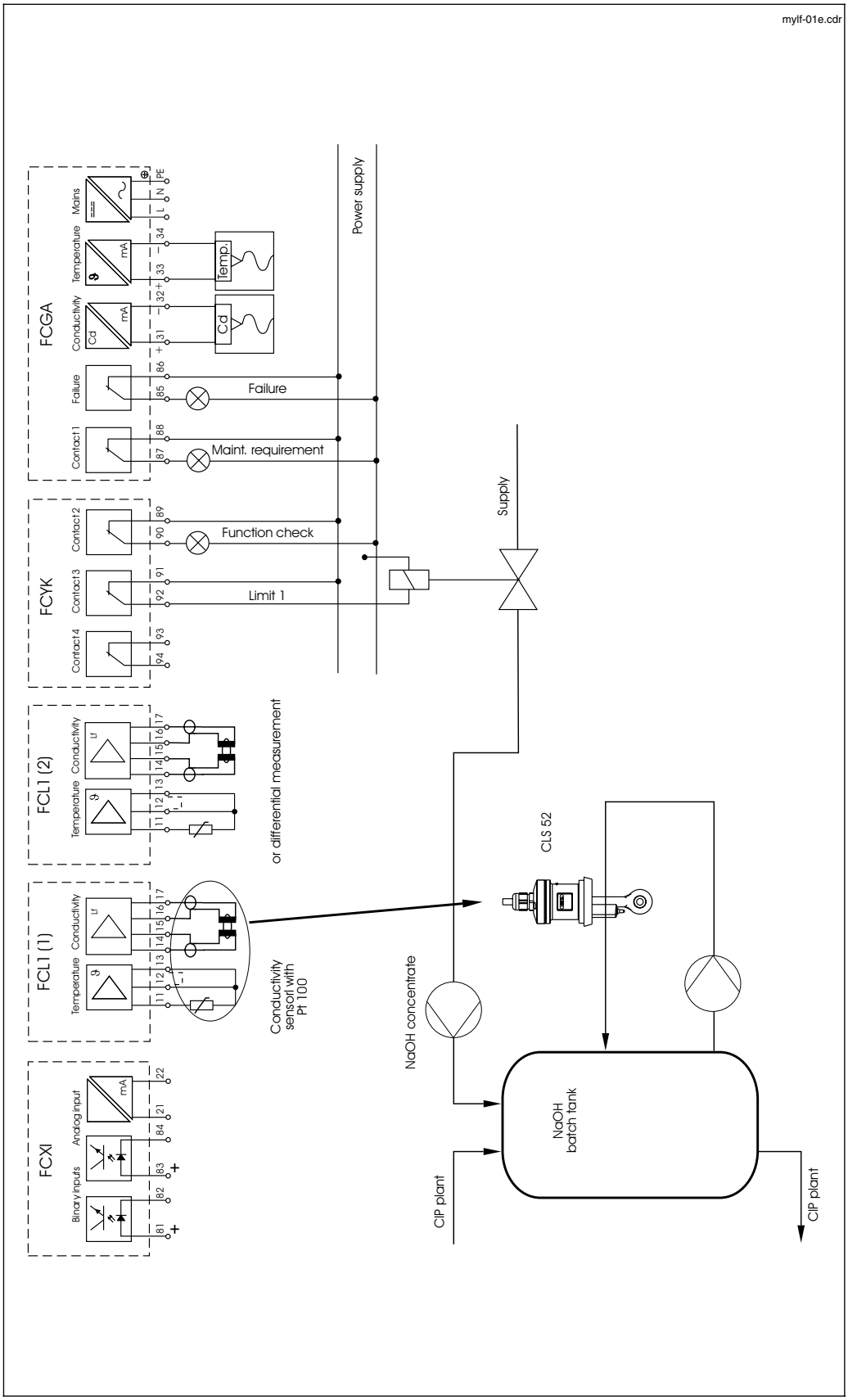

13.2.2 Differential measurement for fruit-juice production

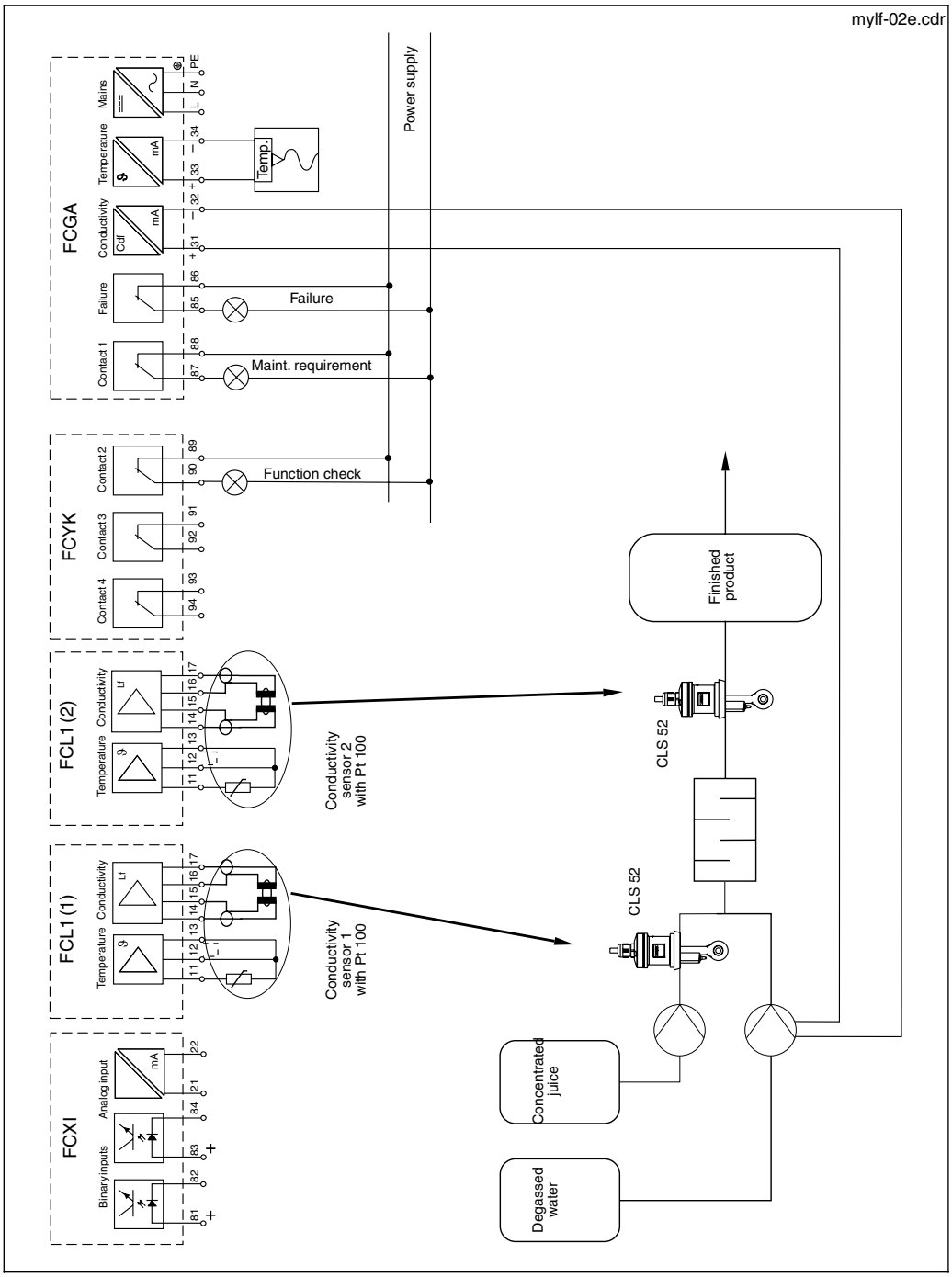

13.3 Connection examples conductive

13.3.1 Limit contactor, NAMUR contacts

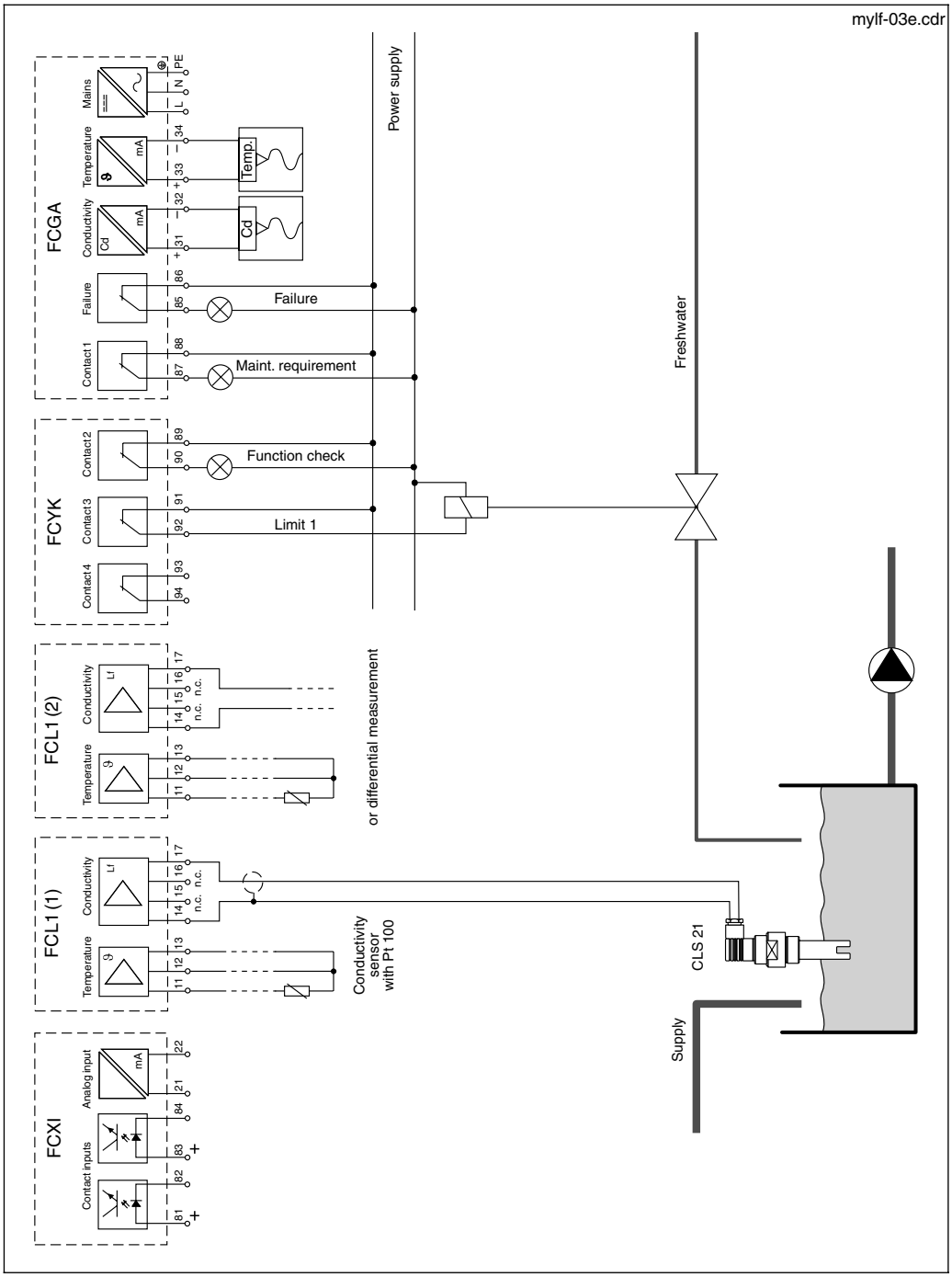

13.3.2 Chemoclean, NAMUR contacts

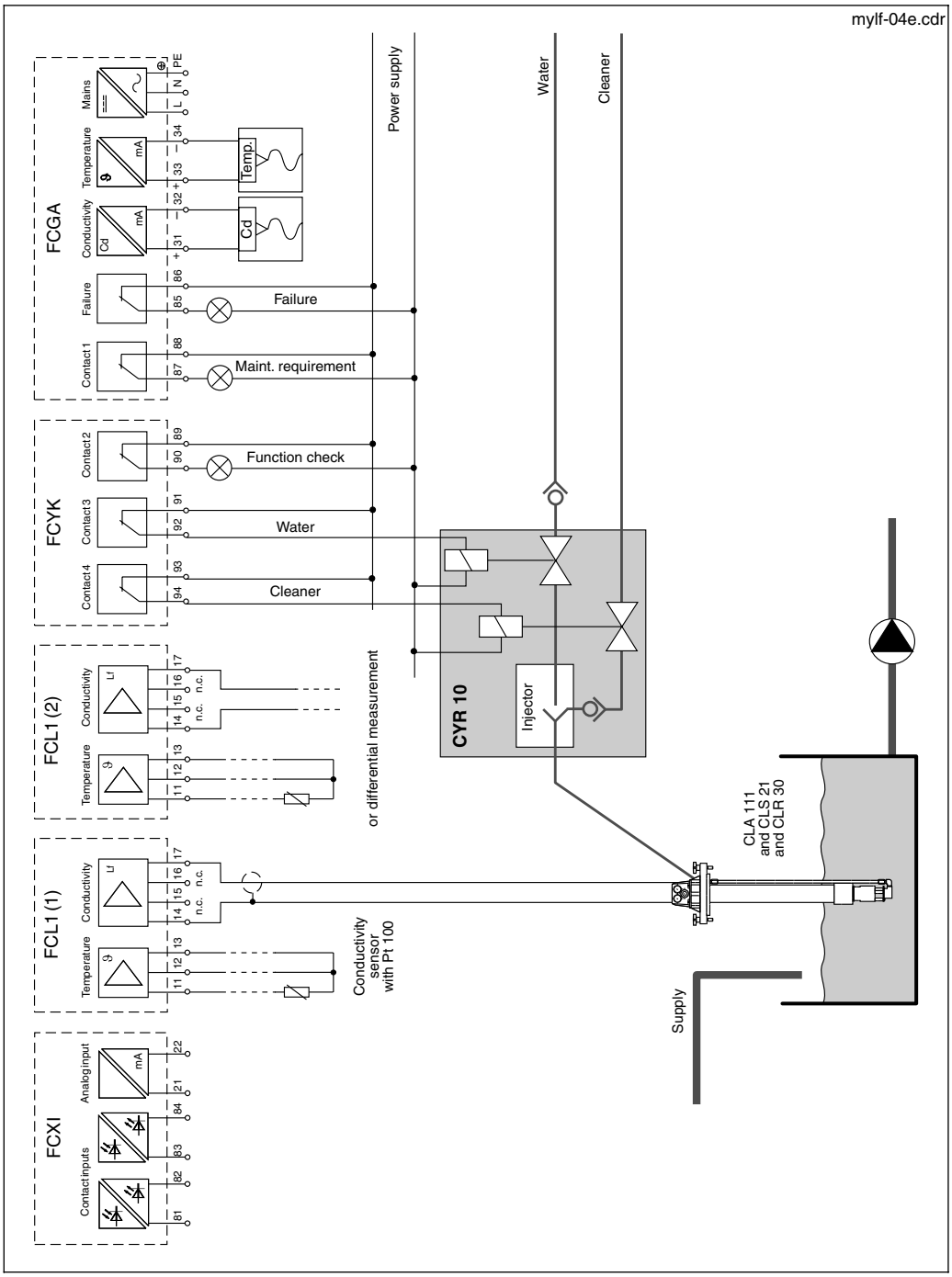

13.3.3 Differential measurement, limit contactor, NAMUR contacts

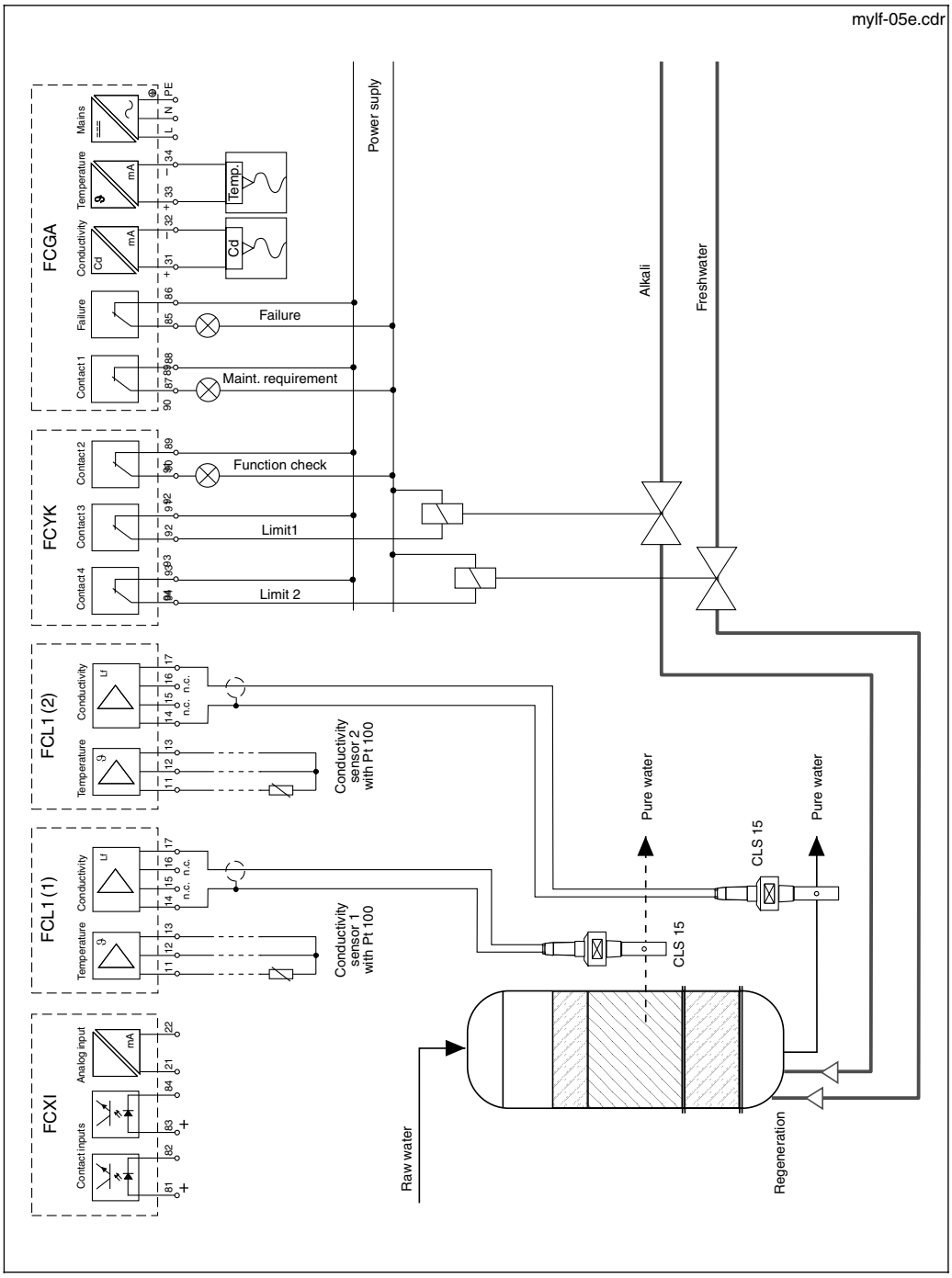

14 Index

15 Menu structure

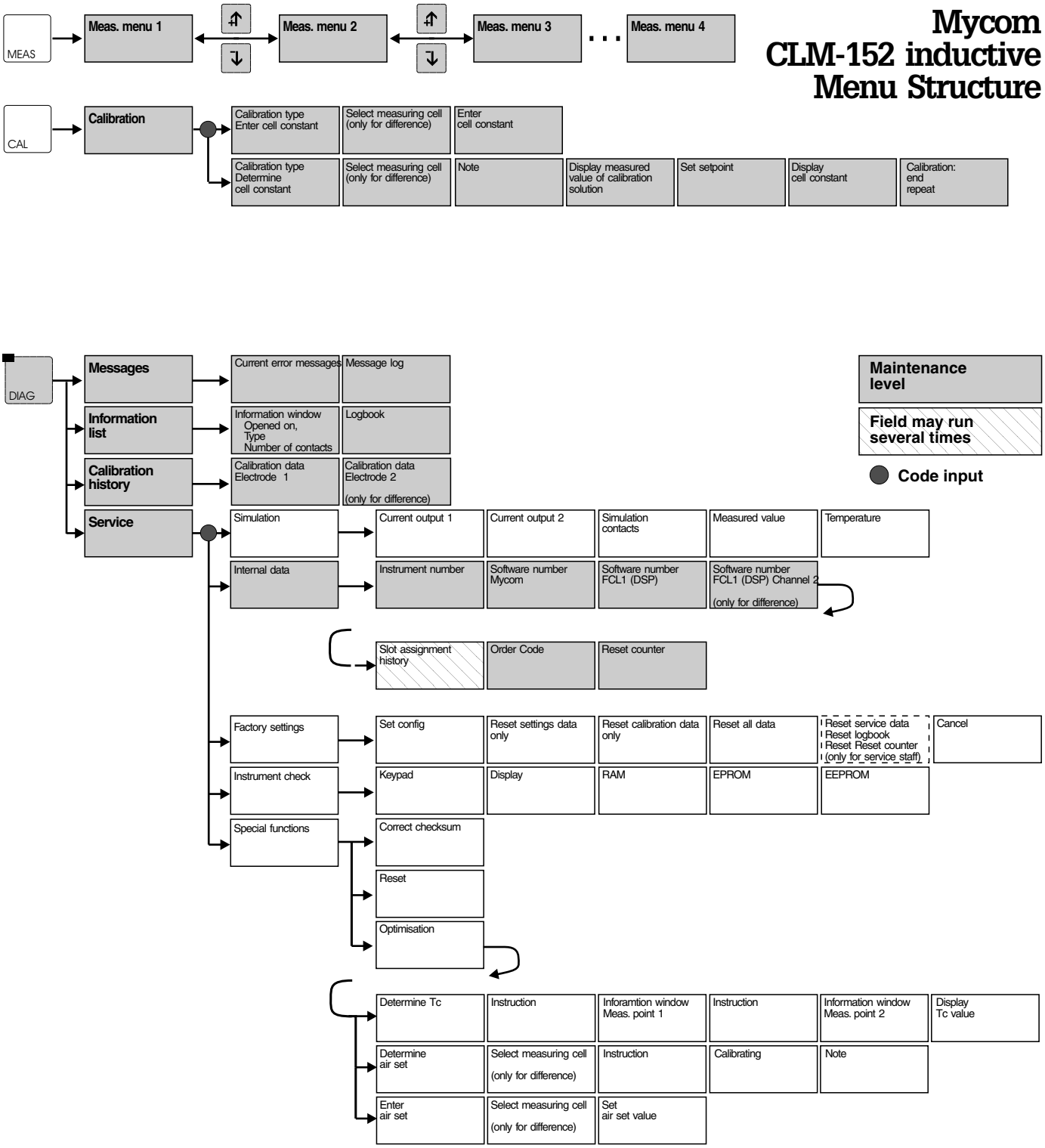

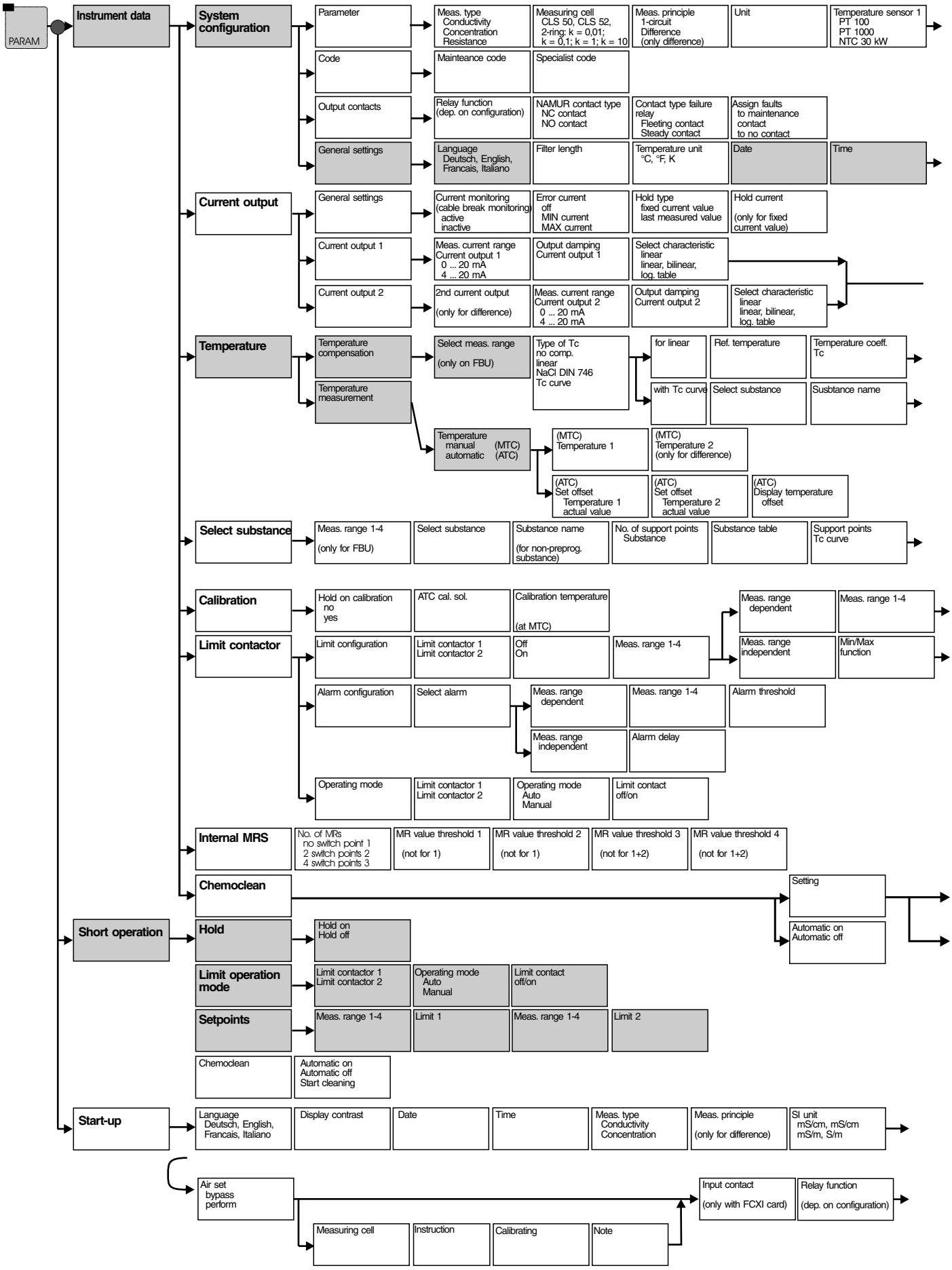
PARAM
Instrument data
System configuration
Parameter
Meas. type
Conductivity
Concentration
Resistance
Measuring cell
CLS 50, CLS 52,
2-ring: k = 0,01;
k = 0,1; k = 1; k = 10
Meas. principle
1-circuit
Difference
(only difference)
Unit
Temperature sensor 1
PT 100
PT 1000
NTC 30 kW
Code
Maintenance code
Specialist code
Output contacts
Relay function
(dep. on configuration)
NAMUR contact type
NC contact
NO contact
Contact type failure relay
Fleeting contact
Steady contact
Assign faults
to maintenance contact
to no contact
General settings
Language
Deutsch, English, Francais, Italiano
Filter length
Temperature unit
°C, °F, K
Date
Time
Current output
General settings
Current monitoring
(cable break monitoring)
active
inactive
Error current
off
MIN current
MAX current
Hold type
fixed current value
last measured value
Hold current
(only for fixed current value)
Current output 1
Meas. current range
Current output 1
0 ... 20 mA
4 ... 20 mA
Output damping
Current output 1
Select characteristic
linear
linear, bilinear,
log. table
Current output 2
2nd current output
(only for difference)
Meas. current range
Current output 2
0 ... 20 mA
4 ... 20 mA
Output damping
Current output 2
Select characteristic
linear
linear, bilinear,
log. table
Temperature
Temperature compensation
Select meas. range
(only on FBU)
Type of Tc
no comp.
linear
NaCl DIN 746
Tc curve
for linear
Ref. temperature
Temperature coeff. Tc
with Tc curve
Select substance
Susbtance name
Temperature measurement
Temperature
manual (MTC)
automatic (ATC)
(MTC)
Temperature 1
(MTC)
Temperature 2
(only for difference)
(ATC)
Set offset
Temperature 1
actual value
(ATC)
Set offset
Temperature 2
actual value
(ATC)
Display temperature offset
Select substance
Meas. range 1-4
(only for FBU)
Select substance
Substance name
(for non-preprog. substance)
No. of support points
Substance
Substance table
Support points
Tc curve
Calibration
Hold on calibration
no
yes
ATC cal. sol.
Calibration temperature
(at MTC)
Meas. range dependent
Meas. range 1-4
Limit contactor
Limit configuration
Limit contactor 1
Limit contactor 2
Off
On
Meas. range 1-4
Meas. range independent
Min/Max function
Alarm configuration
Select alarm
Meas. range dependent
Meas. range 1-4
Alarm threshold
Meas. range independent
Alarm delay
Operating mode
Limit contactor 1
Limit contactor 2
Operating mode
Auto
Manual
Limit contact off/on
Internal MRS
No. of MRs
no switch point 1
2 switch points 2
4 switch points 3
MR value threshold 1
(not for 1)
MR value threshold 2
(not for 1)
MR value threshold 3
(not for 1+2)
MR value threshold 4
(not for 1+2)
Chemoclean
Setting
Automatic on
Automatic off
Short operation
Hold
Hold on
Hold off
Limit operation mode
Limit contactor 1
Limit contactor 2
Operating mode
Auto
Manual
Limit contact off/on
Setpoints
Meas. range 1-4
Limit 1
Meas. range 1-4
Limit 2
Chemoclean
Automatic on
Automatic off
Start cleaning
Start-up
Language
Deutsch, English, Francais, Italiano
Display contrast
Date
Time
Meas. type
Conductivity
Concentration
Meas. principle
(only for difference)
SI unit
mS/cm, mS/cm
mS/m, S/m
Air set
bypass
perform
Input contact
(only with FCXI card)
Relay function
(dep. on configuration)
Measuring cell
Instruction
Calibrating
Note

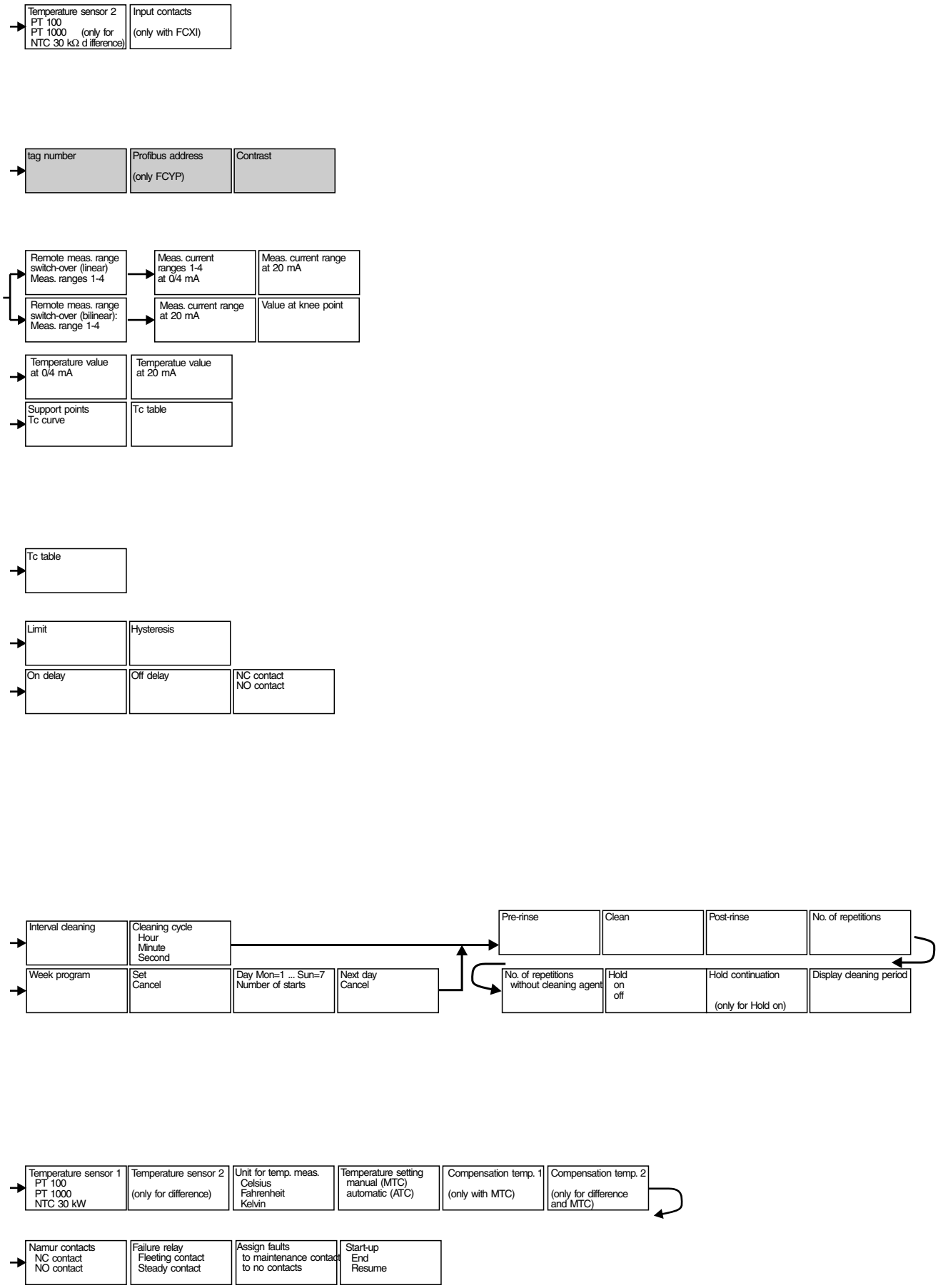
Temperature sensor 2
PT 100
PT 1000 (only for
NTC 30 kΩ difference)
Input contacts
(only with FCXI)
tag number
Profibus address
(only FCYP)
Contrast
Remote meas. range
switch-over (linear)
Meas. ranges 1-4
Meas. current
ranges 1-4
at 0/4 mA
Meas. current range
at 20 mA
Remote meas. range
switch-over (bilinear):
Meas. range 1-4
Meas. current range
at 20 mA
Value at knee point
Temperature value
at 0/4 mA
Temperatue value
at 20 mA
Support points
Tc curve
Tc table
Tc table
Limit
Hysteresis
On delay
Off delay
NC contact
NO contact
Interval cleaning
Cleaning cycle
Hour
Minute
Second
Pre-rinse
Clean
Post-rinse
No. of repetitions
Week program
Set
Cancel
Day Mon=1 ... Sun=7
Number of starts
Next day
Cancel
No. of repetitions
without cleaning agent
Hold
on
off
Hold continuation
(only for Hold on)
Display cleaning period
Temperature sensor 1
PT 100
PT 1000
NTC 30 kW
Temperature sensor 2
(only for difference)
Unit for temp. meas.
Celsius
Fahrenheit
Kelvin
Temperature setting
manual (MTC)
automatic (ATC)
Compensation temp. 1
(only with MTC)
Compensation temp. 2
(only for difference
and MTC)
Namur contacts
NC contact
NO contact
Failure relay
Fleeting contact
Steady contact
Assign faults
to maintenance contact
to no contacts
Start-up
End
Resume

Mycom CLM-152 conductive Menu Structure

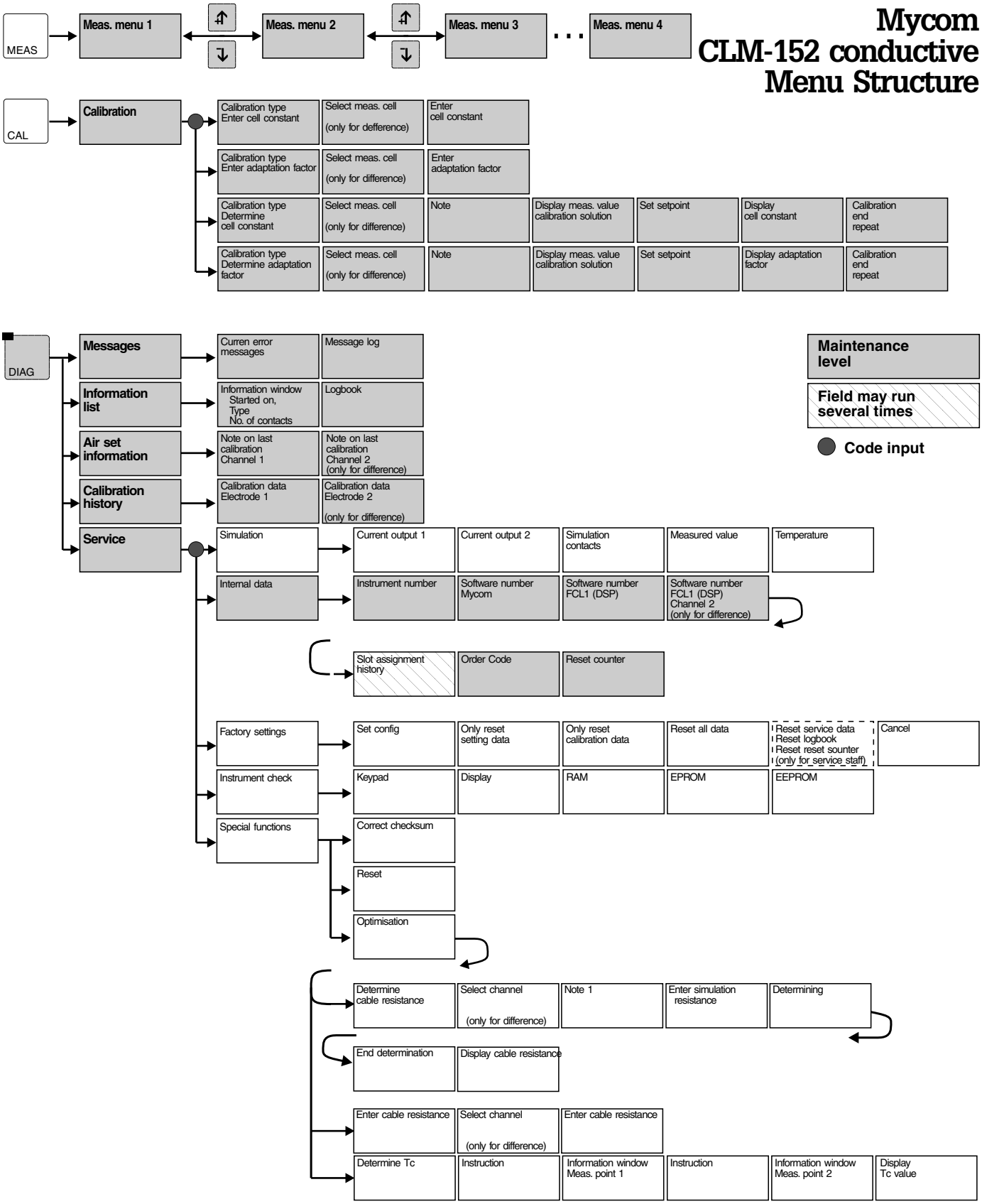

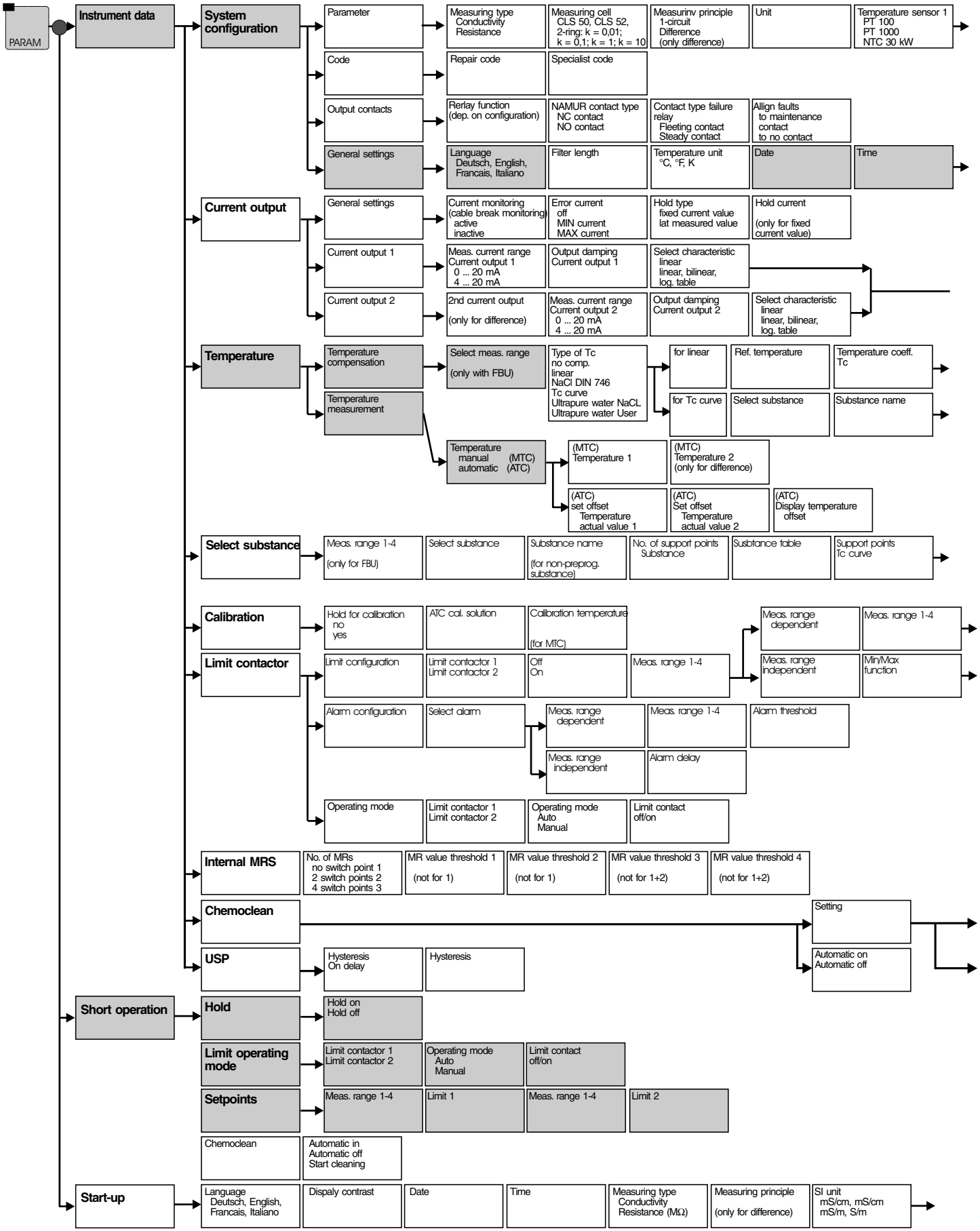
PARAM
Instrument data
System configuration
Parameter
Measuring type Conductivity Resistance
Measuring cell CLS 50, CLS 52, 2-ring: k = 0,01; k = 0,1; k = 1; k = 10
Measurinv principle 1-circuit Difference (only difference)
Unit
Temperature sensor 1 PT 100 PT 1000 NTC 30 kW
Code
Repair code
Specialist code
Output contacts
Rerlay function (dep. on configuration)
NAMUR contact type NC contact NO contact
Contact type failure relay Fleeting contact Steady contact
Allign faults to maintenance contact to no contact
General settings
Language Deutsch, English, Francais, Italiano
Filter length
Temperature unit °C, °F, K
Date
Time
Current output
General settings
Current monitoring (cable break monitoring) active inactive
Error current off MIN current MAX current
Hold type fixed current value lat measured value
Hold current (only for fixed current value)
Current output 1
Meas. current range Current output 1 0 ... 20 mA 4 ... 20 mA
Output damping Current output 1
Select characteristic linear linear, bilinear, log. table
Current output 2
2nd current output (only for difference)
Meas. current range Current output 2 0 ... 20 mA 4 ... 20 mA
Output damping Current output 2
Select characteristic linear linear, bilinear, log. table
Temperature
Temperature compensation
Select meas. range (only with FBU)
Type of Tc no comp. linear NaCl DIN 746 Tc curve Ultrapure water NaCL Ultrapure water User
for linear
Ref. temperature
Temperature coeff. Tc
for Tc curve
Select substance
Substance name
Temperature measurement
Temperature manual (MTC) automatic (ATC)
(MTC) Temperature 1
(MTC) Temperature 2 (only for difference)
(ATC) set offset Temperature actual value 1
(ATC) Set offset Temperature actual value 2
(ATC) Display temperature offset
Select substance
Meas. range 1-4 (only for FBU)
Select substance
Substance name (for non-preprog. substance)
No. of support points Substance
Susbtance table
Support points Tc curve
Calibration
Hold for calibration no yes
ATC cal. solution
Calibration temperature (for MTC)
Meas. range dependent
Meas. range 1-4
Limit contactor
Limit configuration
Limit contactor 1 Limit contactor 2
Off On
Meas. range 1-4
Meas. range independent
Min/Max function
Alarm configuration
Select alarm
Meas. range dependent
Meas. range 1-4
Alarm threshold
Meas. range independent
Alarm delay
Operating mode
Limit contactor 1 Limit contactor 2
Operating mode Auto Manual
Limit contact off/on
Internal MRS
No. of MRs no switch point 1 2 switch points 2 4 switch points 3
MR value threshold 1 (not for 1)
MR value threshold 2 (not for 1)
MR value threshold 3 (not for 1+2)
MR value threshold 4 (not for 1+2)
Chemoclean
Setting
Automatic on Automatic off
USP
Hysteresis On delay
Hysteresis
Short operation
Hold
Hold on Hold off
Limit operating mode
Limit contactor 1 Limit contactor 2
Operating mode Auto Manual
Limit contact off/on
Setpoints
Meas. range 1-4
Limit 1
Meas. range 1-4
Limit 2
Chemoclean
Automatic in Automatic off Start cleaning
Start-up
Language Deutsch, English, Francais, Italiano
Dispaly contrast
Date
Time
Measuring type Conductivity Resistance (MΩ)
Measuring principle (only for difference)
SI unit mS/cm, mS/cm mS/m, S/m

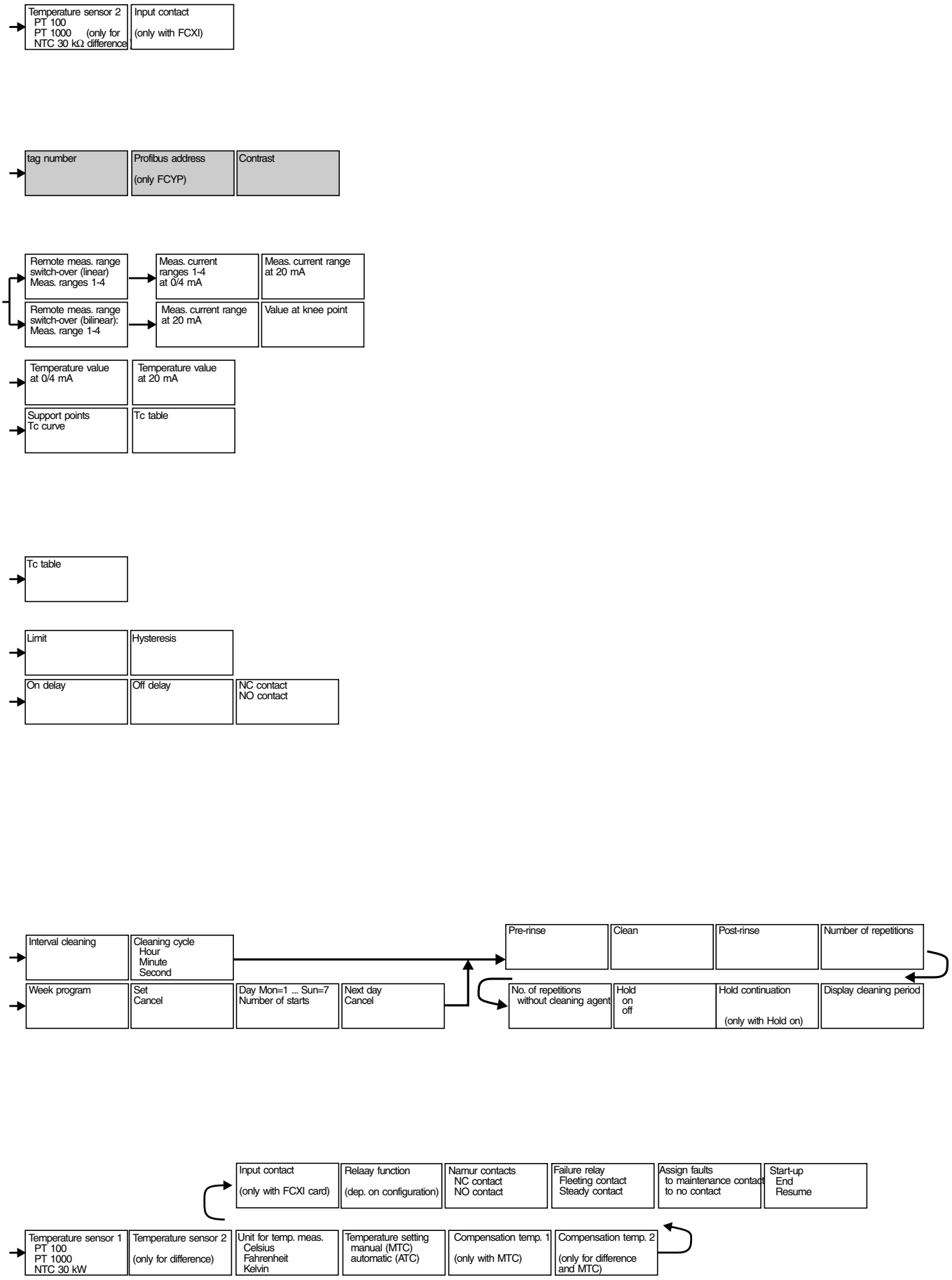
Temperature sensor 2
PT 100
PT 1000 (only for
NTC 30 kΩ difference
Input contact
(only with FCXI)
tag number
Profibus address
(only FCYP)
Contrast
Remote meas. range
switch-over (linear)
Meas. ranges 1-4
Meas. current
ranges 1-4
at 0/4 mA
Meas. current range
at 20 mA
Remote meas. range
switch-over (bilinear):
Meas. range 1-4
Meas. current range
at 20 mA
Value at knee point
Temperature value
at 0/4 mA
Temperature value
at 20 mA
Support points
Tc curve
Tc table
Tc table
Limit
Hysteresis
On delay
Off delay
NC contact
NO contact
Interval cleaning
Cleaning cycle
Hour
Minute
Second
Pre-rinse
Clean
Post-rinse
Number of repetitions
Week program
Set
Cancel
Day Mon=1 ... Sun=7
Number of starts
Next day
Cancel
No. of repetitions
without cleaning agent
Hold
on
off
Hold continuation
(only with Hold on)
Display cleaning period
Input contact
(only with FCXI card)
Relaay function
(dep. on configuration)
Namur contacts
NC contact
NO contact
Failure relay
Fleeting contact
Steady contact
Assign faults
to maintenance contact
to no contact
Start-up
End
Resume
Temperature sensor 1
PT 100
PT 1000
NTC 30 kW
Temperature sensor 2
(only for difference)
Unit for temp. meas.
Celsius
Fahrenheit
Kelvin
Temperature setting
manual (MTC)
automatic (ATC)
Compensation temp. 1
(only with MTC)
Compensation temp. 2
(only for difference
and MTC)

Europe

Austria
❑ Endress+Hauser Ges.m.b.H.
Wien
Tel. (01) 88056-0, Fax (01) 88056-35

Belarus
Belorgsintez
Minsk
Tel. (0172) 263166, Fax (0172) 263111

Belgium / Luxembourg
❑ Endress+Hauser S.A./N.V.
Brussels
Tel. (02) 2480600, Fax (02) 2480553

Bulgaria
INTERTECH-AUTOMATION
Sofia
Tel. (02) 66 48 69, Fax (02) 963 1389

Croatia
❑ Endress+Hauser GmbH+Co.
Zagreb
Tel. (01) 6637785, Fax (01) 6637823

Cyprus
I+G Electrical Services Co. Ltd.
Nicosia
Tel. (02) 484788, Fax (02) 484690

Czech Republic
❑ Endress+Hauser GmbH+Co.
Praha
Tel. (026) 6784200, Fax (026) 6784179

Denmark
❑ Endress+Hauser A/S
Søborg
Tel. (70) 131132, Fax (70) 132133

Estonia
Elvi-Aqua
Tartu
Tel. (7) 441638, Fax (7) 441582

Finland
❑ Endress+Hauser Oy
Espoo
Tel. (90) 8596155, Fax (90) 8596055

France
❑ Endress+Hauser
Huningue
Tel. 8969676 8, Fax 8969480 2

Germany
❑ Endress+Hauser Meßtechnik GmbH+Co.
Weil am Rhein
Tel. (07621) 975-01, Fax (07621) 975-555

Great Britain
❑ Endress+Hauser Ltd.
Manchester
Tel. (0161) 2865000, Fax (0161) 9981841

Greece
I & G Building Services Automation S.A.
Athens
Tel. (01) 9241500, Fax (01) 9221714

Hungary
Mile Ipari-Elektro
Budapest
Tel. (01) 2615535, Fax (01) 2615535

Iceland
Vatnshreinsun HF
Reykjavik
Tel. (05) 619616, Fax (05) 619617

Ireland
Flomeaco Company Ltd.
Kildare
Tel. (045) 868615, Fax (045) 868182

Italy
❑ Endress+Hauser Italia S.p.A.
Cernusco s/N Milano
Tel. (02) 92106421, Fax (02) 92107153

Latvia
Raita Ltd.
Riga
Tel. (07) 312897, Fax (07) 312894

Lithuania
Agava Ltd.
Kaunas
Tel. (07) 202410, Fax (07) 207414

Netherlands
❑ Endress+Hauser B.V.
Naarden
Tel. (035) 6958611, Fax (035) 6958825

Norway
❑ Endress+Hauser A/S
Tranby
Tel. (032) 859850, Fax (032) 859851

Poland
❑ Endress+Hauser Polska Sp. z o.o.
Warszawy
Tel. (022) 7201090, Fax (022) 7201085

Portugal
Tecnisis - Tecnica de Sistemas Industriais
Linda-a-Velha
Tel. (01) 4172637, Fax (01) 4185278

Romania
Romconseng SRL
Bucharest
Tel. (01) 4101634, Fax (01) 4101634

Russia
❑ Endress+Hauser Moscow Office
Moscow
Tel. ++7(095)1587564, Fax (095)1589871

Slovak Republic
Transcom Technik s.r.o.
Bratislava
Tel. (74) 488 86 84, Fax (74) 48871 12

Slovenia
❑ Endress+Hauser D.O.O.
Ljubljana
Tel. (061) 1592217, Fax (061) 1592298

Spain
❑ Endress+Hauser S.A.
Barcelona
Tel. (93) 4803366, Fax (93) 4733839

Sweden
❑ Endress+Hauser AB
Sollentuna
Tel. (08) 5551 1600, Fax (08) 5551 1600

Switzerland
❑ Endress+Hauser AG
Reinach/BL 1
Tel. (061) 7157575, Fax (061) 7111650

Turkey
Intek Endüstriyel Ölcü ve Kontrol Sistemleri
Istanbul
Tel. (0212) 2751355, Fax (0212) 2662775

Ukraine
Industria Ukraïna
Kiev
Tel. (44) 26881, Fax (44) 26908

Yugoslavia
Meris d.o.o.
Beograd
Tel. (11) 4446164, Fax (11) 4441966

Africa

Egypt
Anasia
Heliopolis/Cairo
Tel. (02) 4179007, Fax (02) 4179008

Morocco
Oussama S.A.
Casablanca
Tel. (02) 241338, Fax (02) 402657

Nigeria
J F Technical Invest. Nig. Ltd.
Lagos
Tel. (1) 6223454 6, Fax (1) 6223454 8

South Africa
❑ Endress+Hauser Pty. Ltd.
Sandton
Tel. (011) 4441386, Fax (011) 4441977

Tunisia
Controle, Maintenance et Regulation
Tunis
Tel. (01) 793077, Fax (01) 788595

America

Argentina
❑ Endress+Hauser Argentina S.A.
Buenos Aires
Tel. (01) 54 11 45227970,
Fax (01) 54 11 45227909

Bolivia
Tritec S.R.L.
Cochabamba
Tel. (042) 569 93, Fax (042) 509 81

Brazil
❑ Samson Endress+Hauser Ltda.
Sao Paulo
Tel. (011) 50313455, Fax (011) 50313067

Canada
❑ Endress+Hauser Ltd.
Burlington, Ontario
Tel. (905) 681 9292, Fax (905) 681 9444

Chile
DIN Instrumentos Ltda.
Santiago
Tel. (02) 2088608, Fax (02) 2088608

Colombia
Colsein Ltd.
Bogota D.C.
Tel. (01) 2367659, Fax (01) 6107868

Costa Rica
EURO-TEC S.A.
San Jose
Tel. 2961542, Fax 2961542

Ecuador
Insetec Cia. Ltda.
Quito
Tel. (02) 269148, Fax (02) 461833

Guatemala
ACISA Automatizacion Y Control Industrial S.A.
Ciudad de Guatemala, C.A.
Tel. (02) 345985, Fax (02) 327431

Mexico
❑ Endress+Hauser I.I.
Mexico City
Tel. (5) 568 96 58, Fax (5) 568 41 83

Paraguay
Incoel S.R.L.
Asuncion
Tel. (021) 213989, Fax (021) 26583

Uruguay
Circular S.A.
Montevideo
Tel. (02) 925785, Fax (02) 929151

USA
❑ Endress+Hauser Inc.
Greenwood, Indiana
Tel. (317) 535-7138, Fax (317) 535-1489

Venezuela
H. Z. Instrumentos C.A.
Caracas
Tel. (02) 9440966, Fax (02) 9444554

Asia

China
❑ Endress+Hauser Shanghai
Instrumentation Co. Ltd.
Shanghai
Tel. (021) 54902300, Fax (021) 54902303

❑ Endress+Hauser Beijing Office
Beijing
Tel. (010) 68344058, Fax: (010) 68344068

❑ Endress+Hauser (H.K.) Ltd.
Hong Kong
Tel. (02) 528 31 20, Fax 28654171

India
❑ Endress+Hauser India Branch Office
Mumbai
Tel. (022) 8521458, Fax (022) 8521927

Indonesia
PT Grama Bazita
Jakarta
Tel. (21) 7975083, Fax (21) 7975089

Japan
❑ Sakura Endress Co., Ltd.
Tokyo
Tel. (0422) 540611, Fax (0422) 550275

Malaysia
❑ Endress+Hauser (M) Sdn. Bhd.
Petaling Jaya, Selangor Darul Ehsan
Tel. (03) 7334848, Fax (03) 7338800

Pakistan
Speedy Automation
Karachi
Tel. (021) 7722953, Fax (021) 7736884

Papua New Guinea
SBS Electrical Pty Limited
Port Moresby
Tel. +675(3)25 11 88, Fax (3) 25 95 56

Philippines
Brenton Industries Inc.
Makati Metro Manila
Tel. (2) 6388041, Fax (2) 6388042

Singapore
❑ Endress+Hauser (S.E.A.) Pte., Ltd.
Singapore
Tel. ++65(5)668222, Fax (2)666848

South Korea
❑ Endress+Hauser (Korea) Co., Ltd.
Seoul
Tel. (02) 6587200, Fax (02) 6592838

Taiwan
Kingjarl Corporation
Taipei R.O.C.
Tel. (02) 7183938, Fax (02) 7134190

Thailand
❑ Endress+Hauser Ltd.
Bangkok
Tel. (2) 996 78 11-20, Fax (2) 996 78 10

Vietnam
Tan Viet Bao Co. Ltd.
Ho Chi Minh City
Tel. (08) 8335225, Fax (08) 8335227

Iran
Telephone Technical Services Co. Ltd.
Tehran
Tel. (021) 8754748, Fax(021) 8747761

Israel
Instrumetrics Industrial Control Ltd.
Tel-Aviv
Tel. (03) 6480205, Fax (03) 6471992

Jordan
A.P. Parpas Engineering S.A.
Amman
Tel. (06) 4643246, Fax (06) 4645707

Kingdom of Saudi Arabia
Anasia
Jeddah
Tel. (02) 671 00 14, Fax (02) 672 59 29

Lebanon
Nabil Ibrahim
Jbeil
Tel. (3) 254052, Fax (9) 548038

Sultanate of Oman
Mustafa & Jawad Science & Industry Co.
L.L.C.
Ruwi
Tel. 602009, Fax 607066

United Arab Emirates
Descon Trading EST.
Dubai
Tel. (04) 653651, Fax (04) 653264

Yemen
Yemen Company for Ghee and Soap Industry
Taiz
Tel. (04) 230664, Fax (04) 212338

Australia + New Zealand

Australia
GEC Alsthom LTD.
Sydney
Tel. (02) 97224777, Fax (02) 97224888

New Zealand
EMC Industrial Instrumentation
Auckland
Tel. (09) 4155110 Fax (09) 4155115

All other countries

❑ Endress+Hauser GmbH+Co.
Instruments International
D-Weil am Rhein
Germany
Tel. (07621) 975-02, Fax (07621) 975345

❑ Members of the Endress+Hauser group

51501096

Endress+Hauser
The Power of Know How

BA 144C/07/en/07.00
Printed in Germany / CV5 '/ DT