TI01168C/07/EN/04.22-00
71586544
2022-09-02

Technical Information
Cleanfit CPA875

Retractable process assembly for sterile and hygienic applications for in-line measurement with standard 12 mm sensors for parameters such as pH, ORP, oxygen and NIR

Application

The modular retractable assembly has been consistently developed with safety in mind:
- Safety in operation
- Safety during cleaning for hygienic processes
- Protection against contamination in sterile processes

The assembly is therefore perfectly suitable for use in the following industries:
- Food and beverages
- Biotechnology
- Life sciences
- Special chemicals

Your benefits

- Maximum availability with minimum maintenance
- Safe measurement and accurate measured values
- Higher product quality thanks to reliable measurement results
- Modular design ensures investment is secure
- EHEDG-certified assembly: process connection and service chamber
- Features certified to FDA and USP Class VI
- Versions with 3-A certificate available

Endress+Hauser
People for Process Automation

Function and system design

Mode of operation

With the Cleanfit CPA875 retractable assembly, you can carry out pH, ORP, oxygen and other measurements reliably using suitable sensors. You can remove, clean, sterilize or calibrate/adjust the sensors without interrupting the process.

The assembly can be installed in both vessels and pipes.

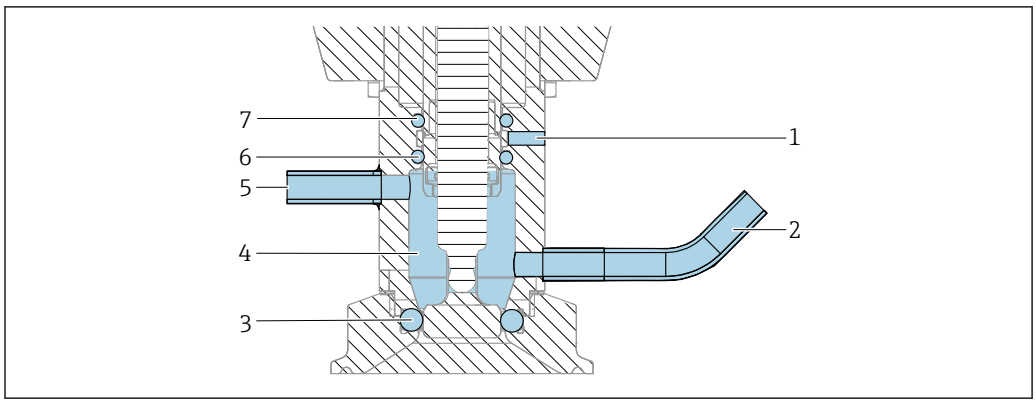

1 Sealing system, assembly in service position

1 Leakage hole
2 Rinse chamber, inlet
3 Process seal, seal for DN25 with 1 x O-ring
4 Rinse chamber
5 Rinse chamber, outlet
6 Seal, rinse chamber (1 x O-ring)
7 Seal drive (1 x O-ring)

Process seal

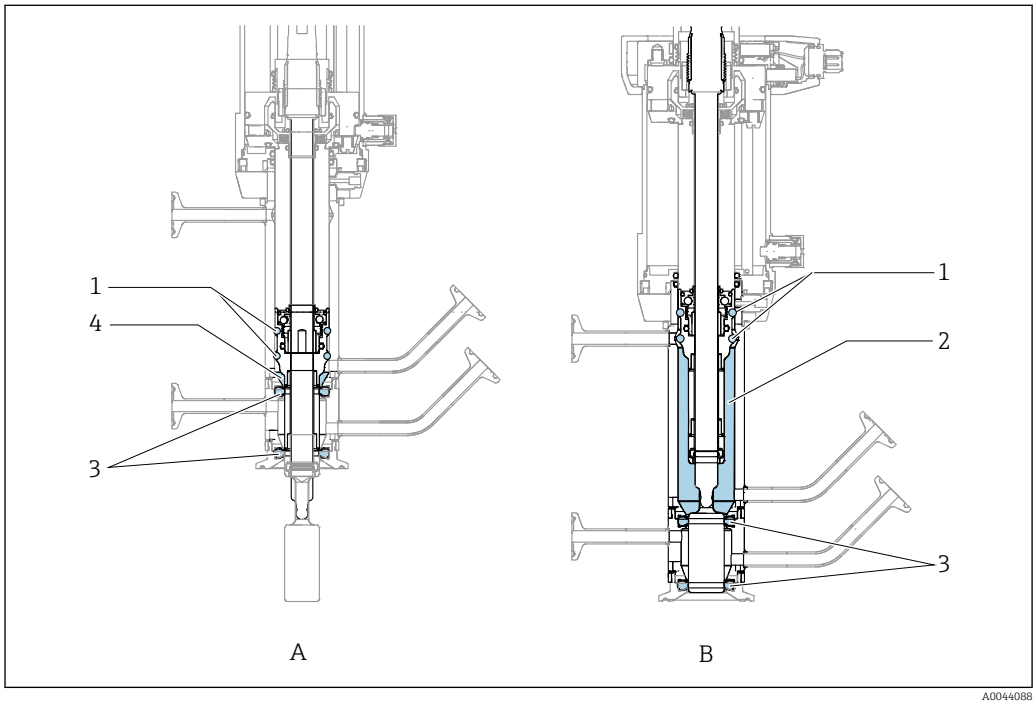

2 Moving sealing rings, only refers to the double chamber

A Measuring position
B Service position
1 "Moving" seals in the double chamber
2 Chamber volume in service position
3 Molded seal
4 Chamber volume in measuring position

Design

The retractable assembly has a modular design and can therefore be flexibly adapted to a wide array of applications. It is available with both a manual and a pneumatic drive.

A choice of two chamber systems is available for the assembly:
- Single-chamber system with a service chamber or
- double-chamber system with an "inner" service chamber and a "front" service chamber

It is possible to choose between the following strokes for the electrode guide:
- 36 mm for flow housing, for example, and
- 78 mm for installation in vessels, for example

This minimizes boundary effects both in the event of flow and in the event of measured values in cooled or heated vessels.

All common process connections are available:

Clamp / Aseptic DIN 11864 / BioControl / BioConnect / Dairy fitting / ISO228 Thread / Varivent

Safety function

Locking mechanism without sensor
If the sensor is not installed, it is not possible to pneumatically or manually move the assembly from the service position to the measuring position.

Manual or pneumatic drive
The sensor can be driven both manually and pneumatically. The manual drive has a self-retaining thread to hold the sensor in any intermediate position. The manual drive can be used for process pressures up to 8 bar (116 psi). The pneumatic drive can be used for process pressures up to 16 bar (232 psi).

Limit position locking if compressed air fails
If the compressed air fails in pneumatic assemblies, the assembly remains in the position previously selected. The process pressure cannot force it out of the measuring position and into an intermediate position.

Limit position locking with manual drive
For position locking, the manual version has an unlocking button in both the measuring position and the service position.

Impossible to remove sensor in the measuring position
The protection cap for covering the sensor has the following functions:
- Mechanical sensor safety
- Prevents sensor removal in the assembly measuring position

The bottom part of the protection cap is partly inserted into the drive and cannot be opened as a result.

Non-rotating sensor guide
During insertion/retraction, the position of the ridges of the immersion tube in the area of the sensor head retains the pre-setting once selected. This guarantees optimum and clear positioning of the sensor in the process and during cleaning.

Limit position detection (can be retrofitted)
In the case of assemblies with a pneumatic drive, the service and measuring position of the sensor are detected inductively and reported to connected systems (only for the measuring position in the case of the manual drive assembly).

Cleaning

Medium drains completely out of "inner" service chamber and the "front" service chamber"
If the assembly is mounted in an angle of up to 15° to the horizontal, the cleaning medium can drain off completely, without leaving any residue.

Special process seal without openings
Special, patented aseptic seals are used to avoid any openings that cannot be cleaned. These meet the same hygienic requirements as pipe connections used in corresponding applications (not for NA process connection).

Certified materials
All sealing materials that are in contact with the medium are FDA-certified and meet USP Class VI specifications.

Electropolished materials 1.4435 (AISI 316 L)
All metal parts that are in contact with the medium have a surface roughness of Ra <0.76 µm or optionally Ra <0.38 µm (immersion tube only).

The Cleanfit CPA875 assembly has been developed to meet cleanability and sterility demands.

Both versions feature different sealing principles to meet these requirements.
- Double-chamber system with sensor cleaning in the "front" service chamber and single-chamber system for certified cleanability
- Double-chamber system with sensor cleaning in the "inner" service chamber for certified cleanability and sterility

Certified cleanability

EHEDG-certified sterilisability
The assembly, including the service chamber and process connection, can be sterilized according to EHEDG specifications.

EHEDG-certified cleanability of service chamber and process seal
In connection with process seal cleaning in a defined third rest position, the assembly, along with the service chamber and process adapter, have been designed according to the EHEDG guidelines for cleanability and sterilizability and certified by the EHEDG. This certifies that residual medium is not only destroyed but is also removed completely from the service chamber and the sealing surface without leaving any residue. Therefore the service chamber and sealing surface are free from product residue and microorganisms.

Certified sterility

Safety in sterile processes with the CPA875 double-chamber system

Contamination-free assembly insertion/retraction thanks to dynamic sealing based on the "syringe principle"
The moving seals in the "inner" service chamber of the double-chamber assembly prevent already sterilized parts from being contaminated by still non-sterilized parts of the sensor guide. This rules out the possibility of contamination of the service chamber, and ultimately the process, even with strict sterility requirements.

Double-chamber system for safe separation between the process and service chamber
On-the-fly cleaning, recalibration and testing of the sensor in a process with sensitive medium requires the reliable and safe separation of the service chamber from the process. For this purpose the "front" chamber of the double chamber assembly can be exposed to sealing medium, for instance. At the same time, this chamber isolates the temperature from the process. The sensor can therefore be removed, calibrated/adjusted or simply cleaned and tested without affecting the process.

Elements

The assembly is available with a manual or pneumatic drive.

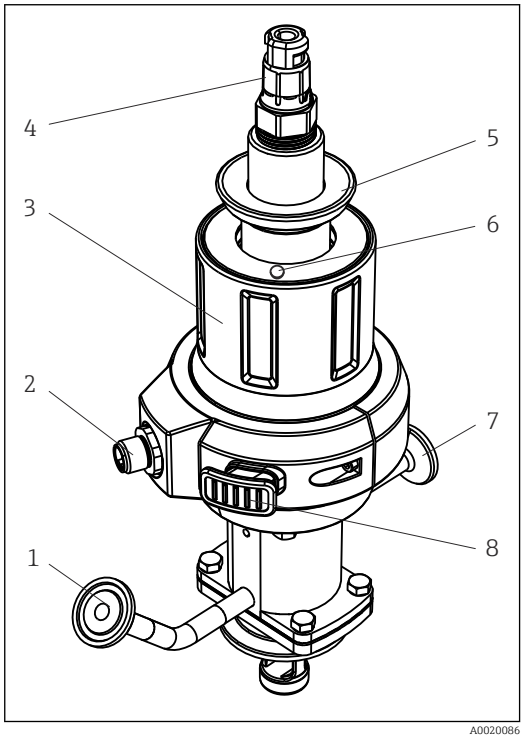

3 Assembly with manual drive (without protection cap)

1. *Rinse connection*
2. *Connection for limit position switch*
3. *Manual drive*
4. *Sensor head*
5. *Fastening ring for protective cap*
6. *Unlocking button (service position)*
7. *Rinse connection*
8. *Unlocking button (measuring position)*

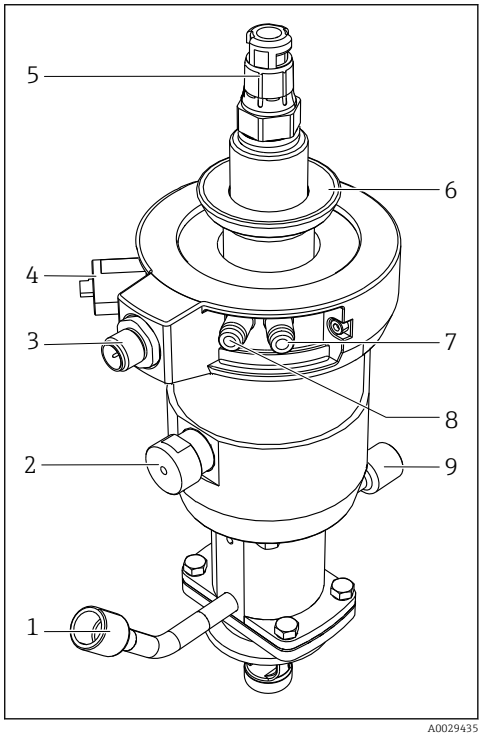

4 Assembly with pneumatic drive (without protective cap)

1. *Rinse connection*
2. *Automatic limit position lock, process*
3. *Connection for limit position switch*
4. *Automatic limit position lock, service*
5. *Sensor head*
6. *Fastening ring for protective cap*
7. *Pneumatic connection (move to measuring position)*
8. *Pneumatic connection (move to service position)*
9. *Rinse connection*

Sealing principle

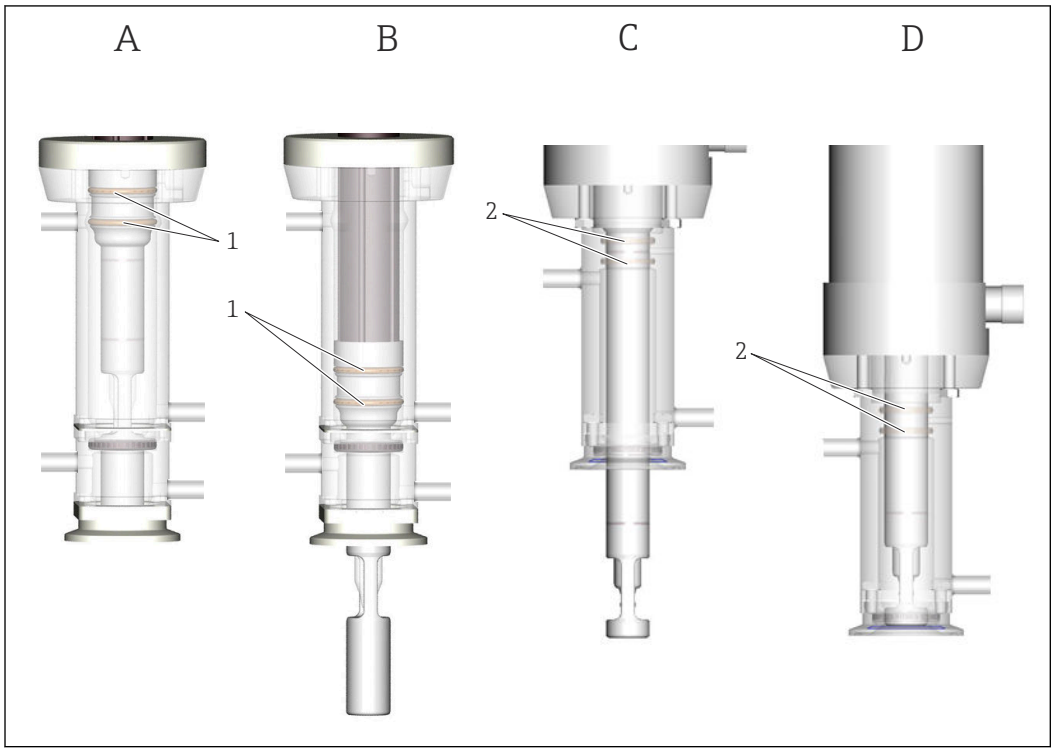

5 Sealing principle

A Double chamber in service position
B Double chamber in measuring position
C Single chamber in measuring position
D Single chamber in service position
1 "Moving" seals in the double chamber
2 "Fixed" seals in the single chamber

Measuring system with single chamber

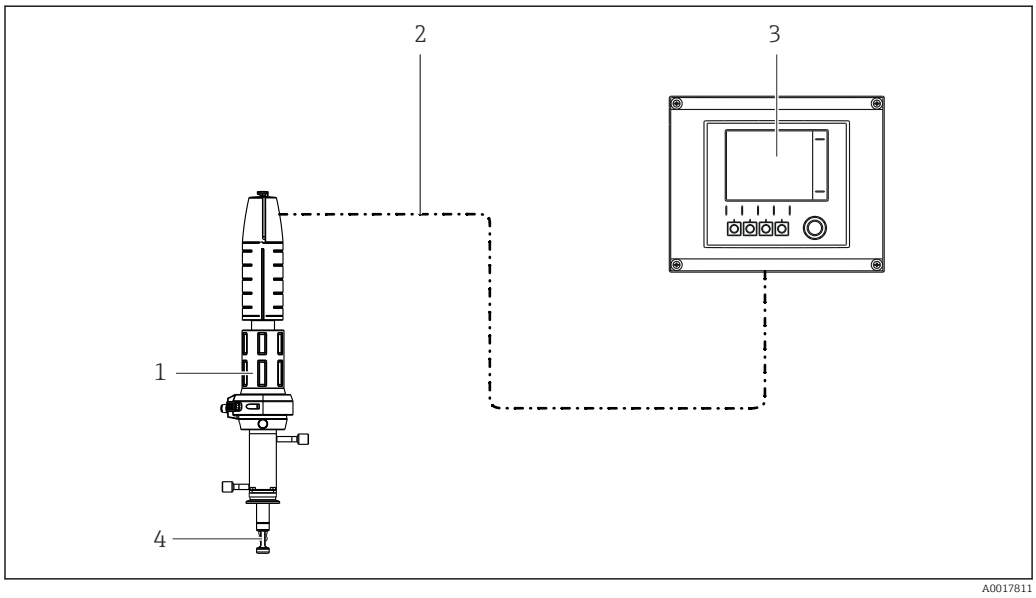

6 Measuring system (example)

1 Assembly Cleanfit CPA875
2 Measuring cable
3 Transmitter Liquiline CM44x
4 Sensor

Measuring system with double chamber

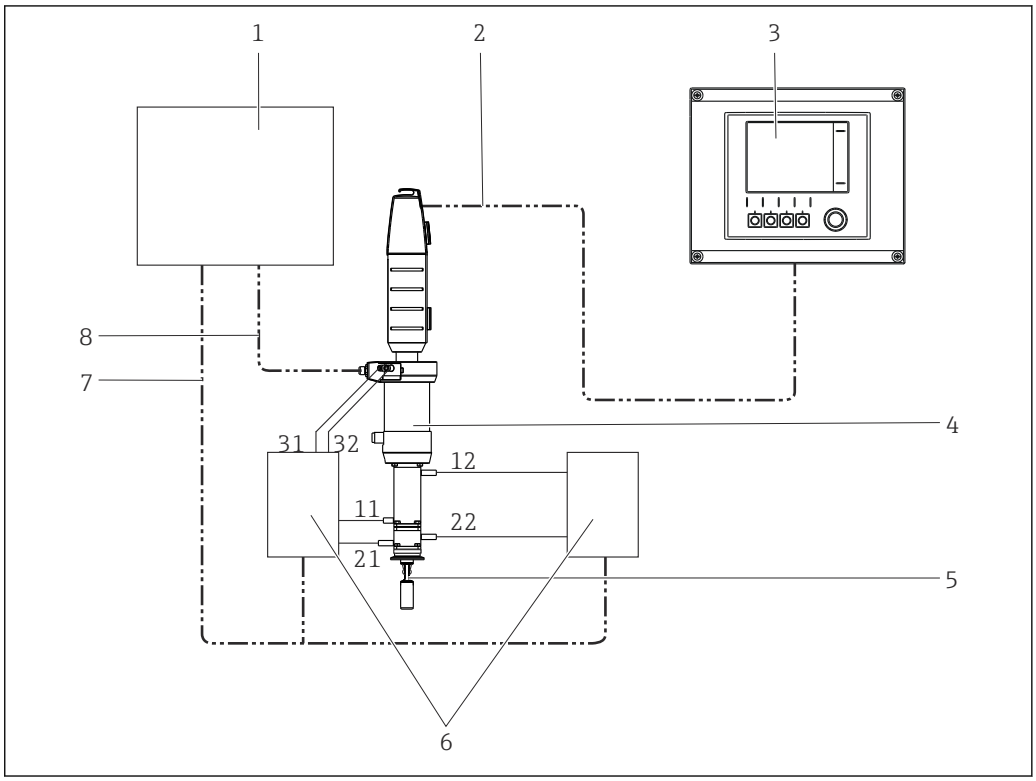

7 Measuring system with pneumatic drive and double chamber (example)

1	*Control unit*	*7*	*Control signals (electric/pneumatic)*
2	*Measuring cable*	*8*	*Limit position switch relay signal*
3	*Transmitter Liquiline CM44x*	*11/12*	*Inlet/outlet of "inner" service chamber*
4	*Assembly Cleanfit CPA875*	*21/22*	*Inlet/outlet of "front" service chamber*
5	*Sensor*	*31/32*	*Drive control*
6	*Manifold*		

Assignment of rinse connections for pressure compensation

Assignment of rinse connections for double chamber

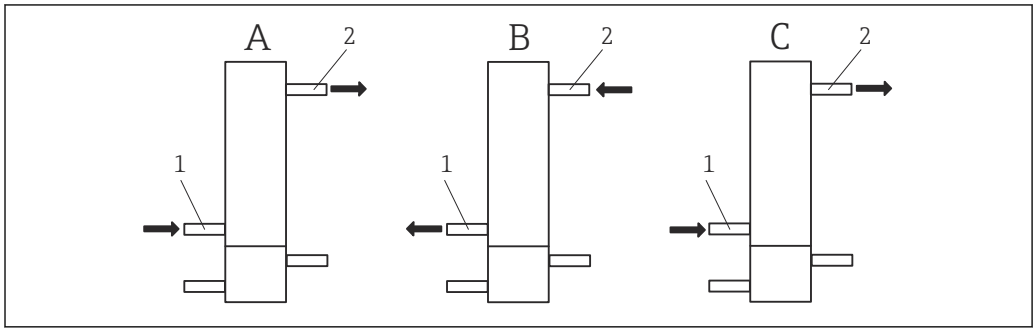

8 Assignment of rinse inlet and outlet

A "Clean" function: connection and water/cleaner flow direction
B Aeration/de-aeration when moving from the service position to the measuring position
C Aeration/de-aeration when moving from the measuring position to the service position
1 Service chamber inlet
2 Service chamber outlet

In the "Cleaning" state (A), the inlet and outlet of the "inner" service chamber are used as follows (the internal volume of the "front" service chamber does not change, and so no pressure compensation measures are required here):
- Depending on the cleaning method, cleaning agent and purge gas are supplied via the inlet (1).
- These media are removed via the outlet (2).

In the "Move from service position to measuring position" state (B), the pressure conditions in the service chamber must be balanced when moving. The inlet and outlet of the service chamber are assigned as follows:
- The air is removed via the inlet (1) (inlet is open).
- Air is supplied via the outlet (2).

In the "Move from measuring position to service position" state (C), the pressure conditions in the service chamber must be balanced when moving. The inlet and outlet of the service chamber are assigned as follows:
- The air is supplied via the inlet (1).
- The air is removed via the outlet (2) (outlet is open).

The drive must be controlled simultaneously with the control of the inlets and outlets of the "inner service chamber".

The controller for the inlets, outlets and the drive is installed at the place of installation. It is not included in the assembly delivery.

Assignment of rinse connections for single chamber

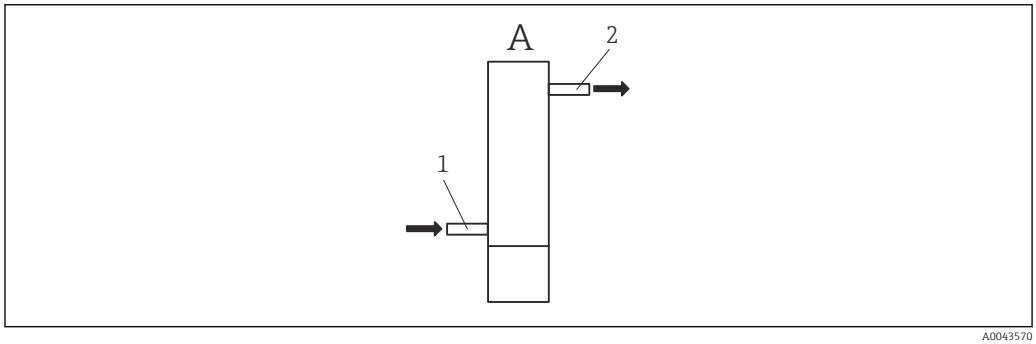

9 Connection and water/cleaner flow direction

A "Clean" function: connection and water/cleaner flow direction
1 Service chamber inlet
2 Service chamber outlet

In the "Cleaning" state (A), the inlet and outlet of the service chamber are used as follows (the internal volume of the service chamber does not change, and so no pressure compensation measures are required here):
- Depending on the cleaning method, cleaning agent is supplied via the inlet (1).
- These media are removed via the outlet (2).

Installation

Sensor selection	Short version	Gel sensors, ISFET	225 mm
		KCl sensors	225 mm
	Long version	Gel sensors, ISFET	225 mm
		Gel sensors, ISFET	360 mm
		KCl sensors	360 mm

Special mounting instructions

Limit position switches

Switching element function:	NAMUR NC contact (inductive)
Switching distance:	1.5 mm (0.06 ")
Nominal voltage:	8 V
Switching frequency:	0 to 5000 Hz
Housing material:	Stainless steel
Output interface terminals	NAMUR
Limit position switches (inductive conductivity sensors)	Pepperl+Fuchs NJ1.5-6.5-15-N-Y180094

Environment

Ambient temperature range

-10 to +70 °C (+10 to +160 °F)

Storage temperature

-10 to +70 °C (+10 to +160 °F)

Process

Process temperature range

−10 to 140 °C (14 to 284 °F)

Process pressure range

Pneumatic drive	16 bar (232 psi) up to 140 °C (284 °F)
Manual drive (PP version may vary)	8 bar (116 psi) to 140 °C (284 °F)

The service life of the seals is reduced if process temperatures are constantly high or if SIP is used. The other process conditions may also reduce the service life of the seals.

Pressure/temperature ratings

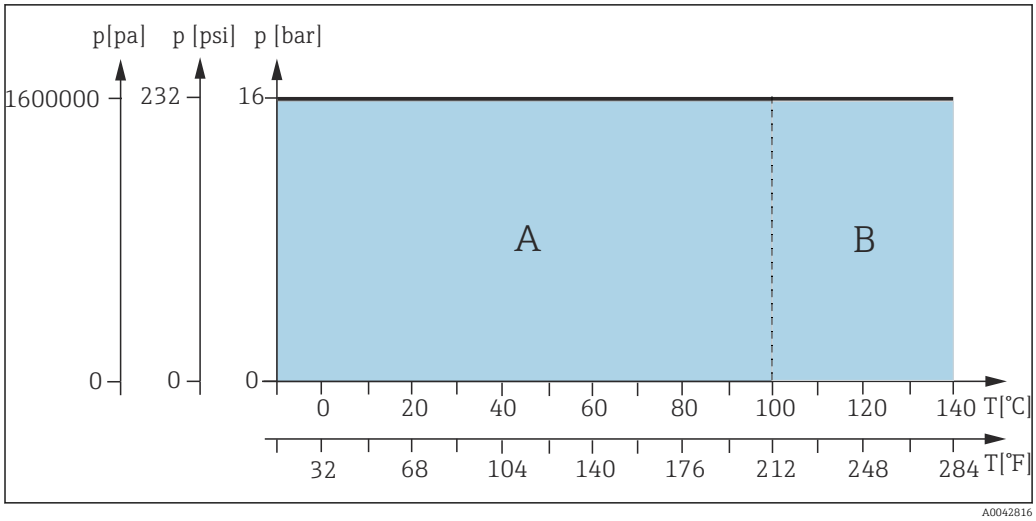

10 Pressure-temperature ratings for pneumatic drive

A Dynamic range
B Static range

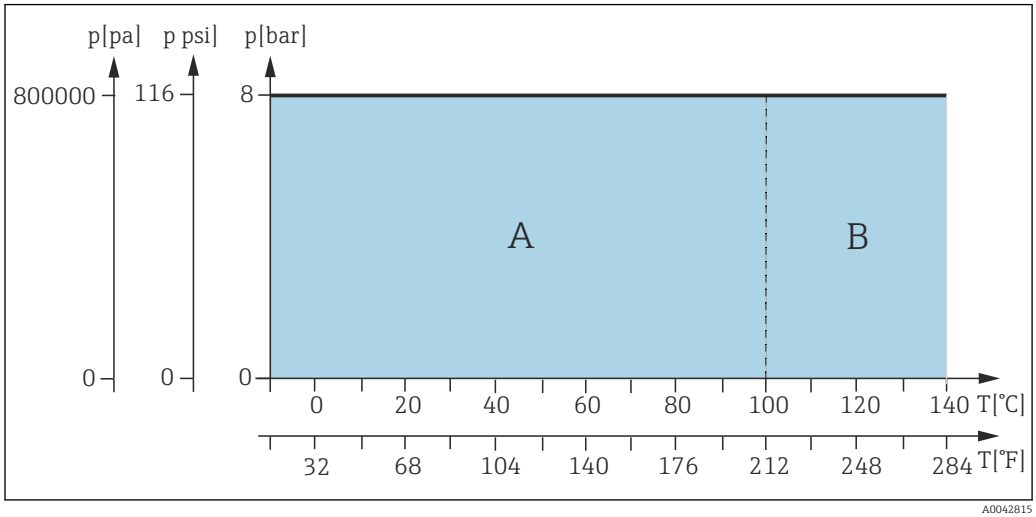

11 Pressure-temperature ratings for manual drive

A Dynamic range
B Static range

Mechanical construction

Design, dimensions

→ Section "Installation"

Rinse chamber volume

	Volume cm³ (in³)(max.)	Volume cm³ (in³)(min.)
Single chamber, short stroke	20.94 (1.28)	10.51 (0.64)
Single chamber, long stroke	42.97 (2.62)	20.77 (1.27)
Double chamber (front)	18.53 (1.13)	9.80 (0.6)
Double chamber (rear)	77.49 (4.72)	47.04 (2.87)
Double chamber (total)	96.02 (5.87)	56.84 (3.47)

Weight

Depends on version:

Pneumatic drive: 3.8 to 6 kg (8.4 to 13.2 lbs) depending on version

Manual drive: 3 to 4.5 kg (6.6 to 9.9 lbs) depending on version

Materials

In contact with medium	
Seals:	EPDM-FDA (USP Class VI) / FKM-FDA (USP Class VI) / FFKM-FDA (USP Class VI)
Immersion tube:	Stainless steel 1.4435 (AISI 316L) Ra < 0.76 / Ra < 0.38
Process connection, service chamber	Stainless steel 1.4435 (AISI 316L) Ra < 0.76
Rinse connections:	Stainless steel 1.4435 (AISI 316L)

Not in contact with medium	
Manual drive:	Stainless steel 1.4301 (AISI 304) or 1.4404 (AISI 316L), plastics PPS CF15, PBT, PP
Pneumatic drive:	Stainless steel 1.4301 (AISI 304) or 1.4404 (AISI 316L), plastics PBT, PP

Rinse connections

Option	Description
Pipe 6/8mm ID/OD	Pipe DIN 11866 series A 8 x 1 hygiene class H4 Internal diameter 6 mm (0.24 in) Outer diameter 8 mm (0.31 in) Ra ≤ 0.38
G1/4 female	Female thread DIN EN ISO 228 G1/4" Pipe internal diameter 6 mm (0.24 in) Surface (excluding thread): Ra ≤ 0.38
NPT1/4 female	Female thread ASME B 1.20.1 – 1983 1/4" NPT Pipe internal diameter 6 mm (0.24 in) Surface (excluding thread): Ra ≤ 0.38
Clamp D6/D25	Clamp nozzle DIN32676 Pipe internal diameter 6 mm (0.24 in) Outer diameter, clamp 25 mm Ra ≤ 0.4
BioConnect DN6	Neumo BioConnect DN6 with male thread M16 x 1.5 with pipe connection according to DIN11866 8x1 Pipe internal diameter 6 mm (0.24 in) Pipe outer diameter 8 mm (0.31 in) Ra ≤ 0.8

Surface finish may vary depending on the manufacturing process.

Certificates and approvals

Current certificates and approvals for the product are available via the Product Configurator at www.endress.com.

1. Select the product using the filters and search field.
2. Open the product page.

The **Configuration** button opens the Product Configurator.

Ordering information

Ordering instructions

Create the order code for the assembly as follows:

1. Is the assembly used in the hazardous or non-hazardous area?
2. Select the drive type and the limit position switches.
3. Select the type of service chamber.
4. What material should the wetted seals be made of?
5. What material should the wetted surfaces be made of?
6. Select the suitable process connection.
7. Which connections should the service chamber have?
8. Select the cleaning position.

Order the accessories as follows:
- If you wish to order the accessories together with the assembly, then use the accessory code of the product structure.
- If you only wish to order accessories, then use the order numbers from the "Accessories" section.

Product page

www.endress.com/cpa875

Product Configurator

1. **Configure**: Click this button on the product page.
2. Select **Extended selection**.
   ↳ The Configurator opens in a separate window.
3. Configure the device according to your requirements by selecting the desired option for each feature.
   ↳ In this way, you receive a valid and complete order code for the device.
4. **Apply**: Add the configured product to the shopping cart.

For many products, you also have the option of downloading CAD or 2D drawings of the selected product version.

5. **Show details**: Open this tab for the product in the shopping cart.
   ↳ The link to the CAD drawing is displayed. If selected, the 3D display format is displayed along with the option to download various formats.

Scope of delivery

The scope of delivery comprises:
- Ordered version of assembly
- Operating Instructions

Accessories

The following are the most important accessories available at the time this documentation was issued.

▶ For accessories not listed here, please contact your Service or Sales Center.

The following accessories can be ordered via the product structure or the spare parts structure XPC0001:
- Weld-in adapter G1¼, straight, 35 mm, 1.4435 (AISI 316 L), safety nozzle
- Weld-in adapter G1¼, angled, 35 mm, 1.4435 (AISI 316 L), safety nozzle

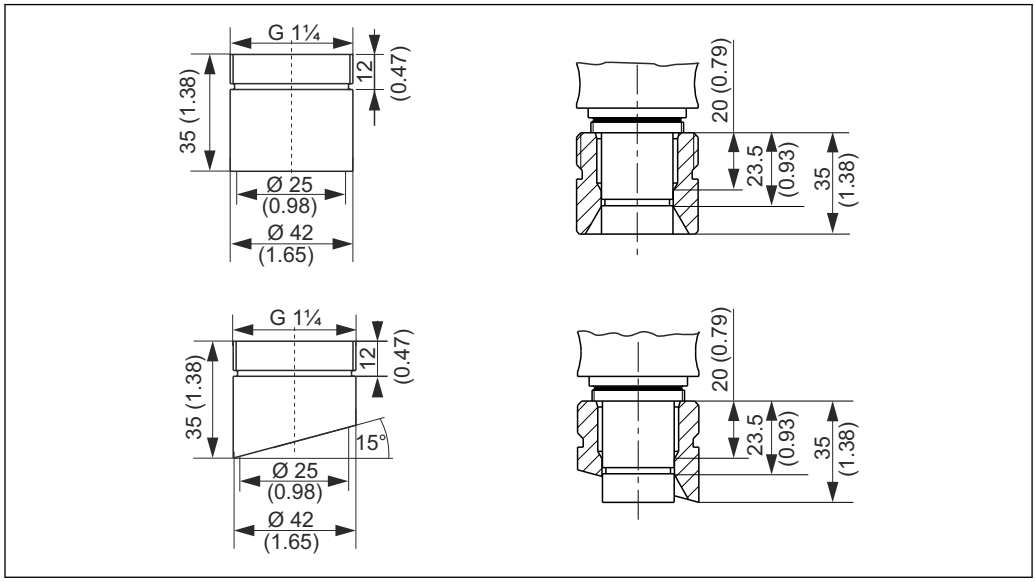

12 *Weld-in adapter (safety nozzle), dimensions in mm (inch)*

- Dummy plug G1¼, 1.4435 (AISI 316 L), FPM - FDA
- Sensor dummy 225 mm, 1.4435 (AISI 316 L), Ra = 0.38 µm
- Sensor dummy 360 mm, 1.4435 (AISI 316 L), Ra = 0.38 µm
- Kit, EPDM FDA seals only for process connection G1¼, wetted parts, single chamber
- Kit, FKM FDA seals only for process connection G1¼, wetted parts, single chamber
- Kit, FFKM FDA seals only for process connection G1¼, wetted parts, single chamber
- Kit, EPDM FDA seals, wetted parts, single chamber, not for process connection G1¼
- Kit, FKM FDA seals, wetted parts, single chamber, not for process connection G1¼
- Kit, FFKM FDA seals, wetted parts, single chamber, not for process connection G1¼
- Kit, EPDM FDA seals, wetted parts, double chamber, all process connections
- Kit, FKM FDA seals, wetted parts, double chamber, all process connections
- Kit, FFKM FDA seals, wetted parts, double chamber, all process connections
- Kit, seals not in contact with the medium
- Cable, plug-in, limit switch, M12, 5 m
- Cable, plug-in, limit switch, M12, 10 m
- Tool in case for installation/removal
- Kit of Klüber Paraliq GTE 703 grease (60g)
- Output interface terminals, version: CPA871-620-R7
  NAMUR terminals for limit position switches
  - Operation of 8V DC feedback signals on 24V DC devices
  - Suitable for top-hat rail mounting

Device-specific accessories

Sensors

pH sensors

Memosens CPS11E
- pH sensor for standard applications in process and environmental engineering
- Digital with Memosens 2.0 technology
- Product Configurator on the product page: www.endress.com/cps11e

Technical Information TI01493C

Orbisint CPS11D / CPS11
- pH sensor for process technology
- With dirt-repellent PTFE diaphragm
- Product Configurator on the product page: www.endress.com/cps11d or www.endress.com/cps11

Technical Information TI00028C

Memosens CPS31E
- pH sensor for standard applications in drinking water and swimming pool water
- Digital with Memosens 2.0 technology
- Product Configurator on the product page: www.endress.com/cps31e

Technical Information TI01574C

Memosens CPS41E
- pH sensor for process technology
- With ceramic junction and KCl liquid electrolyte
- Digital with Memosens 2.0 technology
- Product Configurator on the product page: www.endress.com/cps41e

Technical Information TI01495C

Ceraliquid CPS41D / CPS41
- pH electrode with ceramic junction and KCl liquid electrolyte
- Product Configurator on the product page: www.endress.com/cps41d or www.endress.com/cps41

Technical Information TI00079C

Memosens CPS61E
- pH sensor for bioreactors in life sciences and for the food industry
- Digital with Memosens 2.0 technology
- Product Configurator on the product page: www.endress.com/cps61e

Technical Information TI01566C

Memosens CPS71E
- pH sensor for chemical process applications
- Digital with Memosens 2.0 technology
- Product Configurator on the product page: www.endress.com/cps71e

Technical Information TI01496C

Ceragel CPS71D / CPS71
- pH electrode with reference system including ion trap
- Product Configurator on the product page: www.endress.com/cps71d or www.endress.com/cps71

Technical Information TI00245C

Memosens CPS91E
- pH sensor for heavily polluted media
- Digital with Memosens 2.0 technology
- Product Configurator on the product page: www.endress.com/cps91e

Technical Information TI01497C

Orbipore CPS91D / CPS91
- pH electrode with open aperture for media with high dirt load
- Product Configurator on the product page: www.endress.com/cps91d or www.endress.com/cps91

Technical Information TI00375C

ORP sensors

Memosens CPS12E
- ORP sensor for standard applications in process and environmental engineering
- Digital with Memosens 2.0 technology
- Product Configurator on the product page: www.endress.com/cps12e

Technical Information TI01494C

Orbisint CPS12D / CPS12
- ORP sensor for process technology
- Product Configurator on the product page: www.endress.com/cps12d or www.endress.com/cps12

Technical Information TI00367C

Memosens CPS42E
- ORP sensor for process technology
- Digital with Memosens 2.0 technology
- Product Configurator on the product page: www.endress.com/cps42e

Technical Information TI01575C

Ceraliquid CPS42D / CPS42
- ORP electrode with ceramic junction and KCl liquid electrolyte
- Product Configurator on the product page: www.endress.com/cps42d or www.endress.com/cps42

Technical Information TI00373C

Memosens CPS72E
- ORP sensor for chemical process applications
- Digital with Memosens 2.0 technology
- Product Configurator on the product page: www.endress.com/cps72e

Technical Information TI01576C

Ceragel CPS72D / CPS72
- ORP electrode with reference system including ion trap
- Product Configurator on the product page: www.endress.com/cps72d or www.endress.com/cps72

Technical Information TI00374C

pH-ISFET sensors

Memosens CPS47D
- Sterilizable and autoclavable ISFET sensor for pH measurement
- Refillable KCl liquid electrolyte
- Product Configurator on the product page: www.endress.com/cps47d

Technical Information TI01412C

Memosens CPS77D
- Sterilizable and autoclavable ISFET sensor for pH measurement
- Product Configurator on the product page: www.endress.com/cps77d

Technical Information TI01396

Combined pH/ORP sensors

Memosens CPS16E
- pH/ORP sensor for standard applications in process technology and environmental engineering
- Digital with Memosens 2.0 technology
- Product Configurator on the product page: www.endress.com/cps16e

Technical Information TI01600C

Memosens CPS16D
- Combined pH/ORP sensor for process technology
- With dirt-repellent PTFE diaphragm
- With Memosens technology
- Product Configurator on the product page: www.endress.com/cps16D

Technical Information TI00503C

The 120 mm version in the CPS16D is not suitable.

Memosens CPS76E
- pH/ORP sensor for process technology
- Digital with Memosens 2.0 technology
- Product Configurator on the product page: www.endress.com/cps76e

Technical Information TI01601C

Memosens CPS76D
- Combined pH/ORP sensor for process technology
- Hygienic and sterile applications
- With Memosens technology
- Product Configurator on the product page: www.endress.com/cps76d

Technical Information TI00506C

Memosens CPS96E
- pH/ORP sensor for heavily polluted media and suspended solids
- Digital with Memosens 2.0 technology
- Product Configurator on the product page: www.endress.com/cps96e

Technical Information TI01602C

Memosens CPS96D
- Combined pH/ORP sensor for chemical processes
- With poison-resistant reference with ion trap
- With Memosens technology
- Product Configurator on the product page: www.endress.com/cps96d

Technical Information TI00507C

Conductivity sensors

Memosens CLS82E
- Hygienic conductivity sensor
- Digital with Memosens 2.0 technology
- Product Configurator on the product page: www.endress.com/cls82e

Technical Information TI01529C

Memosens CLS82D
- Four-electrode sensor
- With Memosens technology
- Product Configurator on the product page: www.endress.com/cls82d

Technical Information TI01188C

Oxygen sensors

Oxymax COS22E
- Sterilizable sensor for dissolved oxygen
- Digital with Memosens 2.0 technology
- Product Configurator on the product page: www.endress.com/cos22e

Technical Information TI00446C

Oxymax COS22D / COS22
- Sterilizable sensor for dissolved oxygen
- With Memosens technology or as an analog sensor
- Product Configurator on the product page: www.endress.com/cos22d or www.endress.com/cos22

Technical Information TI00446C

Absorption sensor

OUSBT66
- NIR absorption sensor for measuring cell growth and biomass
- Sensor version suitable for pharmaceutical industry
- Product Configurator on the product page: www.endress.com/ousbt66

Technical Information TI00469C

Service-specific accessories

Cleaning systems

Air-Trol 500
- Control unit for Cleanfit retractable assemblies
- Order No. 50051994

Technical Information TI00038C/07/EN

Cleanfit Control CYC25
- Converts electrical signals into pneumatic signals to control pneumatically-operated retractable assemblies or pumps in conjunction with Liquiline CM44x
- Wide range of control options
- Product Configurator on the product page: www.endress.com/cyc25

Technical Information TI01231C

Liquiline Control CDC90
- Fully automatic cleaning and calibration system for pH and ORP measuring points in all industries
- Cleaned, validated, calibrated and adjusted
- Product Configurator on the product page: www.endress.com/cdc90

Technical Information TI01340C

Installation material for rinse connections	**Kit, water filter** ▪ Water filter (dirt trap) 100 µm, complete, incl. angle bracket ▪ Order No. 71390988 **Pressure reducer kit** ▪ Complete, incl. manometer and angle bracket ▪ Order No. 71390993 **Hose connection set G¼, DN 12** ▪ 1.4404 (AISI 316L) 2 x ▪ Order No. 51502808 **Hose connection set G¼, DN 12** ▪ PVDF (2 x) ▪ Order No. 50090491

71586544

www.addresses.endress.com

Endress+Hauser

People for Process Automation