BA02241C/07/EN/01.22-00
71561682
2022-02-28

Valid as of version
02.02.00

Operating Instructions
Liquiline Control CDC90

Data transmission via EtherNet/IP

Endress+Hauser
People for Process Automation

Table of contents

1 About this document

Structure of information	Meaning
DANGER **Causes (/consequences)** If necessary, Consequences of non-compliance (if applicable) ▶ Corrective action	This symbol alerts you to a dangerous situation. Failure to avoid the dangerous situation **will** result in a fatal or serious injury.
WARNING **Causes (/consequences)** If necessary, Consequences of non-compliance (if applicable) ▶ Corrective action	This symbol alerts you to a dangerous situation. Failure to avoid the dangerous situation **can** result in a fatal or serious injury.
CAUTION **Causes (/consequences)** If necessary, Consequences of non-compliance (if applicable) ▶ Corrective action	This symbol alerts you to a dangerous situation. Failure to avoid this situation can result in minor or more serious injuries.
NOTICE **Cause/situation** If necessary, Consequences of non-compliance (if applicable) ▶ Action/note	This symbol alerts you to situations which may result in damage to property.

1.1 Symbols

- Additional information, tips
- Permitted or recommended
- Not permitted or not recommended
- Reference to device documentation
- Reference to page
- Reference to graphic
- Result of a step

1.1.1 Symbols on the device

- Reference to device documentation
- Do not dispose of products bearing this marking as unsorted municipal waste. Instead, return them to the manufacturer for disposal under the applicable conditions.

1.2 Documentation

This supplementary documentation must be used only in conjunction with a Liquiline Control CDC90 with EtherNet/IP.

This supplementary documentation is an integral part of the Operating Instructions and provides additional information on the use of the device with EtherNet/IP.

More information can be found in the following Operating Instructions:

Operating Instructions CDC90 BA01707C

This document is aimed at individuals who are incorporating the device into a EtherNet/IP network.

It is assumed that the reader has basic knowledge in this area.

1.3 List of abbreviations

n/a	Not applicable
NaN	Not a number (IEEE-754, 7Fh A0h 00h 00h)
ENP	Electronic name plate
I&M	Identification & Maintenance
AI	Analog Input (PA Profile function block)
DI	Discrete Input (PA Profile function block)
AO	Analog Output (PA Profile function block)
DO	Discrete Output (PA Profile function block)
DCS	Distributed control system

2 Basic safety instructions

2.1 Requirements for the personnel

- Installation, commissioning, operation and maintenance of the measuring system may be carried out only by specially trained technical personnel.
- The technical personnel must be authorized by the plant operator to carry out the specified activities.
- The electrical connection may be performed only by an electrical technician.
- The technical personnel must have read and understood these Operating Instructions and must follow the instructions contained therein.
- Faults at the measuring point may only be rectified by authorized and specially trained personnel.

Repairs not described in the Operating Instructions provided must be carried out only directly at the manufacturer's site or by the service organization.

2.2 Intended use

Liquiline Control CDC90 is a fully automatic measuring, cleaning and calibration system for Memosens sensors. The system is fully equipped with power supply cables and a hose system.

2.2.1 Non-intended use

Use of the device for any purpose other than that described, poses a threat to the safety of people and of the entire measuring system and is therefore not permitted.

The manufacturer is not liable for damage caused by improper or non-designated use.

2.3 Workplace safety

As the user, you are responsible for complying with the following safety conditions:
- Installation guidelines
- Local standards and regulations
- Regulations for explosion protection

Electromagnetic compatibility
- The product has been tested for electromagnetic compatibility in accordance with the applicable international standards for industrial applications.
- The electromagnetic compatibility indicated applies only to a product that has been connected in accordance with these Operating Instructions.

2.4 Operational safety

Before commissioning the entire measuring point:

1. Verify that all connections are correct.
2. Ensure that electrical cables and hose connections are undamaged.
3. Do not operate damaged products, and protect them against unintentional operation.
4. Label damaged products as defective.

During operation:

- If faults cannot be rectified:
  products must be taken out of service and protected against unintentional operation.

⚠ CAUTION

Programs not switched off during maintenance activities.

Risk of injury due to medium or cleaning agent!

- ▶ Quit any programs that are active.
- ▶ Switch to the Service Mode before you remove sensors from the assembly.
- ▶ If you need to test the cleaning function while cleaning is in progress, wear protective clothing, goggles and gloves or take other suitable measures to protect yourself.

2.5 Product safety

2.5.1 State-of-the-art technology

The product is designed to meet state-of-the-art safety requirements, has been tested, and left the factory in a condition in which it is safe to operate. The relevant regulations and international standards have been observed.

2.6 IT security

We only provide a warranty if the device is installed and used as described in the Operating Instructions. The device is equipped with security mechanisms to protect it against any inadvertent changes to the device settings.

IT security measures in line with operators' security standards and designed to provide additional protection for the device and device data transfer must be implemented by the operators themselves.

3 Electrical connection

3.1 Connecting the communication interfaces

Installation and wiring is described in the Operating Instructions of Liquiline Control CDC90.

The Anybus X gateway connects a Modbus TCP network to a Ethernet/IP network, thereby enabling the seamless flow of information between the CDC90 and a control system.

Only one gateway is required for a one-channel and two-channel system and is included with the order. For the installation and wiring procedure, please refer to the Gateway Installation Instructions provided with the Liquiline Control CDC90 upon delivery.

The gateway must be installed externally.

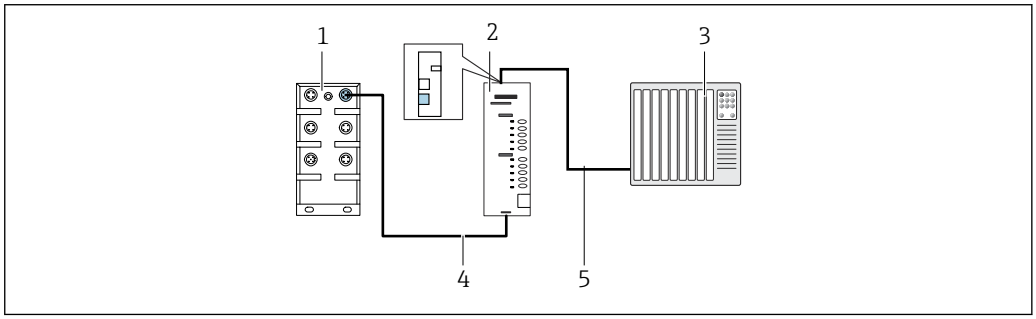

1 Communication connection

1 Ethernet switch on the CDC90
2 Gateway
3 Process control system PCS
4 Ethernet cable, CDC90/gateway communication (3 m (9.8 ft) cable M12-RJ45 included in scope of supply)
5 Communication connection, gateway/process control system PCS

1. To connect to the CDC90, connect the Ethernet cable (4) to the bottom of the gateway.
2. Connect the end piece to the Ethernet switch (1).
3. To connect to the DCS, connect the communication cable (5) to the top of the gateway.
4. Connect the end piece to the PCS (3).

3.1.1 IP configuration between CDC90 and gateway

1. Connect the Modbus TCP interface to the bottom of the gateway. → 1, 9
2. Configure the Modbus TCP interface at the gateway with IP address 192.168.0.6.

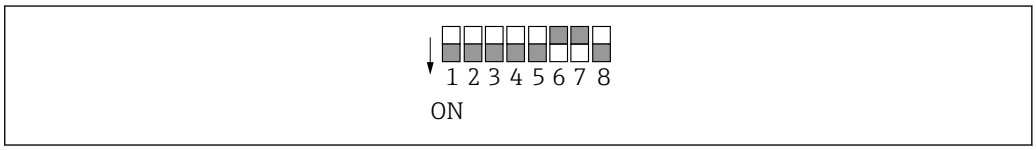

2 IP address for EtherNet/IP

3.1.2 IP configuration between gateway and process control system (PCS)

1. Connect the Ethernet/IP interface to the top of the gateway. → 1, 9

2. When connecting the power supply, first make sure that all switches are in the upper (zero) position.
3. Configure the interface at the gateway.
   ↳ The switch sets the binary value of the last byte of the IP address (192.168.0.1-254).
4. Use Anybus IPconfig to set all IP addresses outside of this range.
   https://cdn.hms-networks.com/docs/librariesprovider7/default-document-library/manuals-design-guides/hms-scm-1202-141.pdf?sfvrsn=ba254fd7_14

4 System integration

4.1 Integrating EtnerNet/IP communication into the system

4.1.1 EDS file

The file is available from the following sources:

German

https://www.de.endress.com/de/messgeraete-fuer-die-prozesstechnik/fluessigkeitsanalyse-produktuebersicht/pH-elektrode-automatische-reinigung-kalibrierung-cdc90

English

https://www.endress.com/en/Field-instruments-overview/liquid-analysis-product-overview/pH-sensor-automatic-cleaning-calibration-cdc90

▶ Upload the following EDS file to the PCS system:

005A000C004B0300.eds

The following manufacturer-specific EDS files are available:

https://www.anybus.com/de/support/file-doc-downloads/x-gateway-specific/?orderCode=AB7632

4.1.2 Selecting EtherNet/IP

To specify which fieldbus communication method is used to send commands, go to:

1. Select the EtherNet/ IP protocol.
2. Press **Accept** to confirm.

The values cannot be read until this setting has been made.

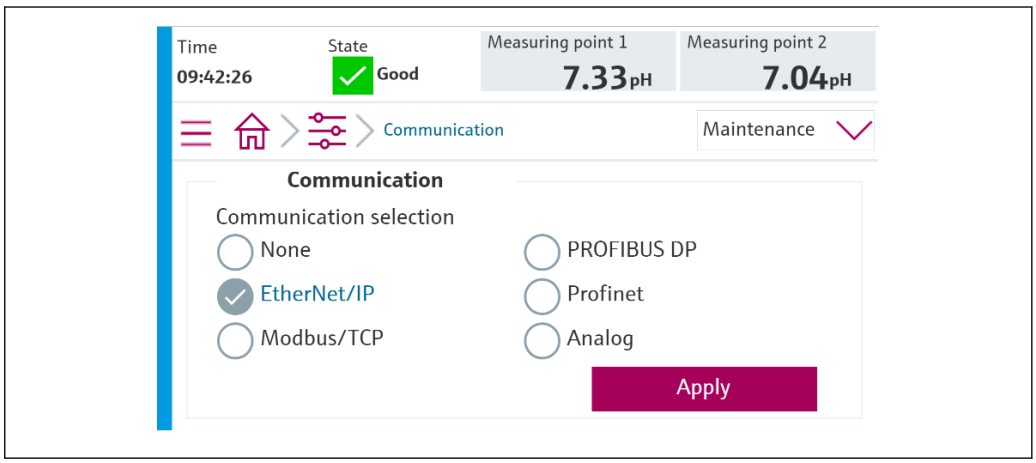

A0041807

Only one fieldbus communication is used to send commands to the Liquiline Control CDC90 or to read the values.

Once the protocol has been enabled, but the connection to the control station has not been detected or established, an Out of Spec message 1003 is reported: communication to the distributed control system is interrupted.

4.1.3 Diagnostics

Diagnostics information is provided in the Gateway Operating Instructions.

4.1.4 Parameter tables

Variables	R/W	Bytes	Size	Total bytes
System control	w	00 ... 13	14	14 Outputs
System Information	R	00 ... 13	14	448 Inputs
Calibration report	R	14 ... 63	50	
Information about measuring point 1	R	64 ... 111	48	
Information about measuring point 2	R	112 ... 159	48	
IO feedbacks	R	160 ... 239	80	
Name of the device	R	240 ... 271	32	
Device information	R	272 ... 447	176	

Output parameters

The output data modules are used as command parameters to start programs or change the operating mode.

The program IDs can be viewed in the "CDC90 program configuration tool" or found on the local display under the User Guidance / Programs menu.

System control

Parameter	Description	Data type	Bytes
OpMode-Control	2 = OpMode is automatic 3 = OpMode is remote	Unsigned16	0, 1
ProgramSelection	Select the program via the program ID	Unsigned16	6, 7
ProgramControl	0 = No program started 1 = Start selected program 2 = Pause active program (currently not supported) 3 = Quit active program	Unsigned16	8, 9

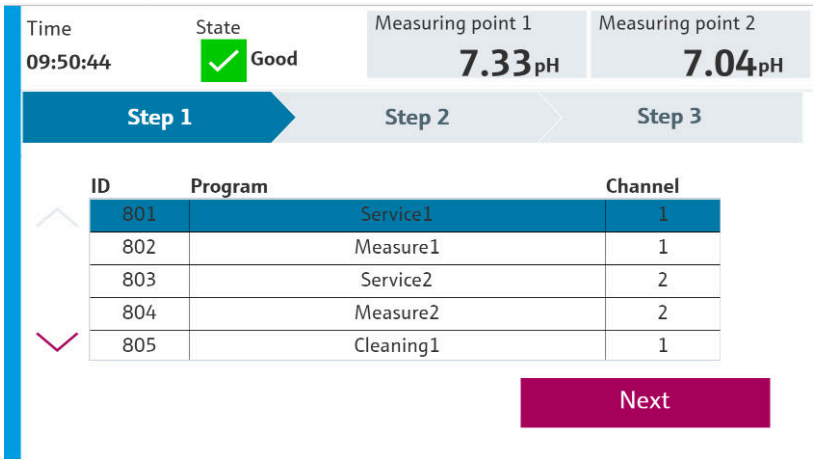

A0041775

3 *Overview of the programs*

Programs			
ID	Name	Sequence	Channel
801	Service1	1001	1
802	Measure1	1002	1
803	Service2	1001	2
804	Measure2	1002	2
805	Cleaner1	1009	1
806	Cleaner2	1009	2

A0047731

4 *Programming in the configuration tool*

Input parameters

System Information

Parameter	Description	Data type	Bytes
OpMode-State	0 = OpMode is setup 1 = OpMode is manual 2 = OpMode is automatic 3 = OpMode is remote	UINT	0, 1
Alarm-State	0 = CDC90 has no alarm 1 = CDC90 has an error alarm 2 = CDC90 has a function control alarm 3= CDC90 has a maintenance alarm 4= CDC90 has an out of specification alarm	UINT	2, 3
Alarm-Number	Number of last diagnostic message to appear	UINT	4, 5
ProgramSelection-State	Reflects the ProgramSelection, if valid.	UINT	6, 7
ProgramControl-State	0 = No program running 1 = Selected program running 2 = Active program paused (currently not supported) 3 = Active program stopped 4 = Selected program canceled 5 = Selected program quit	UINT	8, 9
Current Step	Active program step	UINT	10, 11
Program-Result	0 = No result 1 = Selected program completed successfully 2 = Selected program not completed successfully	UINT	12, 13

Calibration results

Calibration results for measuring point 1 and for measuring point 2:

Sensor	Calibration result measured value 1	Calibration result measured value 2	Calibration result measured value 3	Calibration result measured value 4	Calibration result measured value 5
pH glass	Current raw value mV	Current measured value pH	Temperature °C	Slope mV/pH	Zero point pH
pH ISFET	Current raw value mV	Current measured value pH	Temperature °C	Slope mV/pH	Zero point pH

Sensor	Calibration result measured value 1	Calibration result measured value 2	Calibration result measured value 3	Calibration result measured value 4	Calibration result measured value 5
ORP	Current raw value mV	Current measured value pH (Raw value+Offset)	Temperature °C	Offset value mV	No data
pH/ORP	pH calibration				
	Current raw value mV	Current measured value pH	Temperature °C	Slope mV/pH	Zero point pH
	ORP calibration				
	Current raw value mV	Current measured value pH (Raw value+Offset)	Temperature °C	Offset value mV	No data

Parameter	Description	Data type	Bytes
CalibrationResult1-Value		REAL	14, 15, 16, 17
CalibrationResult1-Unit	0 = No unit 7 = % 23 = nA 25 = mA 53 = pH 59 = hPa 65 = kΩ 66 = MΩ 89 = °C 90 = K 110 = mV 114 = mV/pH 127 = °F	UINT	18, 19
CalibrationResult1-Valid	0 = OK 1 = Busy 2 = Local calibration active 3 = Sensor not configured 4 = Sensor not supported 5 = Invalid entry 6 = Calibration error	UINT	20, 21
CalibrationResult1-Type	0 = No calibration type defined 1 = Raw value 2 = Measured value 3 = Temperature 4 = Offset 5 = Medium 1 6 = Measured value 1 7 = Medium 2 8 = Measured value 2 9 = Slope 10 = Zero point 11 = Delta slope 12 = Delta zero point	UINT	22, 23
CalibrationResult2-Value		REAL	24, 25, 26, 27

Parameter	Description	Data type	Bytes
CalibrationResult2-Unit	0 = No unit 7 = % 23 = nA 25 = mA 53 = pH 59 = hPa 65 = kΩ 66 = MΩ 89 = ℃ 90 = K 110 = mV 114 = mV/pH 127 = ℉	UINT	28, 29
CalibrationResult2-Valid	0 = OK 1 = Busy 2 = Local calibration active 3 = Sensor not configured 4 = Sensor not supported 5 = Invalid entry 6 = Calibration error	UINT	30, 31
CalibrationResult2-Type	0 = No calibration type defined 1 = Raw value 2 = Measured value 3 = Temperature 4 = Offset 5 = Medium 1 6 = Measured value 1 7 = Medium 2 8 = Measured value 2 9 = Slope 10 = Zero point 11 = Delta slope 12 = Delta zero point	UINT	32, 33
CalibrationResult3-Value		REAL	34, 35, 36, 37
CalibrationResult3-Unit	0 = No unit 7 = % 23 = nA 25 = mA 53 = pH 59 = hPa 65 = kΩ 66 = MΩ 89 = ℃ 90 = K 110 = mV 114 = mV/pH 127 = ℉	UINT	38, 39
CalibrationResult3-Valid	0 = OK 1 = Busy 2 = Local calibration active 3 = Sensor not configured 4 = Sensor not supported 5 = Invalid entry 6 = Calibration error	UINT	40, 41

Parameter	Description	Data type	Bytes
CalibrationResult3-Type	0 = No calibration type defined 1 = Raw value 2 = Measured value 3 = Temperature 4 = Offset 5 = Medium 1 6 = Measured value 1 7 = Medium 2 8 = Measured value 2 9 = Slope 10 = Zero point 11 = Delta slope 12 = Delta zero point	UINT	42, 43
CalibrationResult4-Value		REAL	44, 45, 46, 47
CalibrationResult4-Unit	0 = No unit 7 = % 23 = nA 25 = mA 53 = pH 59 = hPa 65 = kΩ 66 = MΩ 89 = °C 90 = K 110 = mV 114 = mV/pH 127 = °F	UINT	48, 49
CalibrationResult4-Valid	0 = OK 1 = Busy 2 = Local calibration active 3 = Sensor not configured 4 = Sensor not supported 5 = Invalid entry 6 = Calibration error	UINT	50, 51
CalibrationResult4-Type	0 = No calibration type defined 1 = Raw value 2 = Measured value 3 = Temperature 4 = Offset 5 = Medium 1 6 = Measured value 1 7 = Medium 2 8 = Measured value 2 9 = Slope 10 = Zero point 11 = Delta slope 12 = Delta zero point	UINT	52, 53
CalibrationResult5-Value		REAL	54, 55, 56, 57
CalibrationResult5-Unit	0 = No unit 7 = % 23 = nA 25 = mA 53 = pH 59 = hPa 65 = kΩ 66 = MΩ 89 = °C 90 = K 110 = mV 114 = mV/pH 127 = °F	UINT	58, 59

Parameter	Description	Data type	Bytes
CalibrationResult5-Valid	0 = OK 1 = Busy 2 = Local calibration active 3 = Sensor not configured 4 = Sensor not supported 5 = Invalid entry 6 = Calibration error	UINT	60, 61
CalibrationResult5-Type	0 = No calibration type defined 1 = Raw value 2 = Measured value 3 = Temperature 4 = Offset 5 = Medium 1 6 = Measured value 1 7 = Medium 2 8 = Measured value 2 9 = Slope 10 = Zero point 11 = Delta slope 12 = Delta zero point	UINT	62, 63

Measured value units of the sensors

Information about measuring point 1 and measuring point 2

Sensor	Measured value 1	Measured value 2	Measured value 3	Measured value 4	Measured value 5
pH glass	Current measured value pH	Raw value mV	Glass impedance MΩ	Temperature °C	----
pH ISFET	Current measured value pH	Raw value mV	Leak current nA	Temperature °C	----
ORP	ORP mV	ORP %	----	Temperature °C	----
pH/ORP	Current measured value pH	ORP mV	Raw value mV	Temperature °C	Reference impedance kΩ

Information about measuring point 1

Parameter	Description	Data type	Bytes
Channel1-Activation	0 = Active 1 = Not active (only read in at restart)	UINT	64, 65
Channel1-Position	0 = Assembly in service position 1 = Assembly in measure position	UINT	66, 67
Channel1-Hold	0 = Not active 1 = Active	UINT	68, 69
Channel1-ConnectedSensorType	0 = None 3 = pH glass 5 = pH ISFET 8 = ORP 18 = pH/ORP	UINT	70, 71
Channel1-Value1		REAL	72, 73, 74, 75

Parameter	Description	Data type	Bytes
Channel1-Value1-Unit	0 = No unit 7 = % 23 = nA 25 = mA 53 = pH 59 = hPa 65 = kΩ 66 = MΩ 89 = °C 90 = K 110 = mV 114 = mV/pH 127 = °F	UINT	76, 77
Channel1-Value1-Valid	0 = Good 1 = Uncertain 2 = Bad 3 = Not assigned	UINT	78, 79
Channel1-Value2		REAL	80, 81, 82, 83
Channel1-Value2-Unit	0 = No unit 7 = % 23 = nA 25 = mA 53 = pH 59 = hPa 65 = kΩ 66 = MΩ 89 = °C 90 = K 110 = mV 114 = mV/pH 127 = °F	UINT	84, 85
Channel1-Value2-Valid	0 = Good 1 = Uncertain 2 = Bad 3 = Not assigned	UINT	86, 87
Channel1-Value3		REAL	88, 89, 90, 91
Channel1-Value3-Unit	0 = No unit 7 = % 23 = nA 25 = mA 53 = pH 59 = hPa 65 = kΩ 66 = MΩ 89 = °C 90 = K 110 = mV 114 = mV/pH 127 = °F	UINT	92, 93
Channel1-Value3-Valid	0 = Good 1 = Uncertain 2 = Bad 3 = Not assigned	UINT	94, 95
Channel1-Value4		REAL	96, 97, 98, 99

Parameter	Description	Data type	Bytes
Channel1-Value4-Unit	0 = No unit 7 = % 23 = nA 25 = mA 53 = pH 59 = hPa 65 = kΩ 66 = MΩ 89 = ℃ 90 = K 110 = mV 114 = mV/pH 127 = ℉	UINT	100, 101
Channel1-Value4-Valid	0 = Good 1 = Uncertain 2 = Bad 3 = Not assigned	UINT	102, 103
Channel1-Value5		REAL	104, 105, 106, 107
Channel1-Value5-Unit	0 = No unit 7 = % 23 = nA 25 = mA 53 = pH 59 = hPa 65 = kΩ 66 = MΩ 89 = ℃ 90 = K 110 = mV 114 = mV/pH 127 = ℉	UINT	108, 109
Channel1-Value5-Valid	0 = Good 1 = Uncertain 2 = Bad 3 = Not assigned	UINT	110, 111

Information about measuring point 2

Parameter	Description	Data type	Bytes
Channel2-Activation	0 = Active 1 = Not active (only read in at restart)	UINT	112, 113
Channel2-Position	0 = Assembly in service position 1 = Assembly in measure position	UINT	114, 115
Channel2-Hold	0 = Not active 1 = Active	UINT	116, 117
Channel2-ConnectedSensorType	0 = None 3 = pH glass 5 = pH ISFET 8 = ORP 18 = pH/ORP	UINT	118, 119
Channel2-Value1		REAL	120, 121, 122, 123

Parameter	Description	Data type	Bytes
Channel2-Value1-Unit	0 = No unit 7 = % 23 = nA 25 = mA 53 = pH 59 = hPa 65 = kΩ 66 = MΩ 89 = °C 90 = K 110 = mV 114 = mV/pH 127 = °F	UINT	124, 125
Channel2-Value1-Valid	0 = Good 1 = Uncertain 2 = Bad 3 = Not assigned	UINT	126, 127
Channel2-Value2		REAL	128, 129, 130, 131
Channel2-Value2-Unit	0 = No unit 7 = % 23 = nA 25 = mA 53 = pH 59 = hPa 65 = kΩ 66 = MΩ 89 = °C 90 = K 110 = mV 114 = mV/pH 127 = °F	UINT	132, 133
Channel2-Value2-Valid	0 = Good 1 = Uncertain 2 = Bad 3 = Not assigned	UINT	134, 135
Channel2-Value3		REAL	136, 137, 138, 139
Channel2-Value3-Unit	0 = No unit 7 = % 23 = nA 25 = mA 53 = pH 59 = hPa 65 = kΩ 66 = MΩ 89 = °C 90 = K 110 = mV 114 = mV/pH 127 = °F	UINT	140, 141
Channel2-Value3-Valid	0 = Good 1 = Uncertain 2 = Bad 3 = Not assigned	UINT	142, 143
Channel2-Value4		REAL	144, 145, 146, 147

Parameter	Description	Data type	Bytes
Channel2-Value4-Unit	0 = No unit 7 = % 23 = nA 25 = mA 53 = pH 59 = hPa 65 = kΩ 66 = MΩ 89 = ℃ 90 = K 110 = mV 114 = mV/pH 127 = ℉	UINT	148, 149
Channel2-Value4-Valid	0 = Good 1 = Uncertain 2 = Bad 3 = Not assigned	UINT	150, 151
Channel2-Value5		REAL	152, 153, 154, 155
Channel2-Value5-Unit	0 = No unit 7 = % 23 = nA 25 = mA 53 = pH 59 = hPa 65 = kΩ 66 = MΩ 89 = ℃ 90 = K 110 = mV 114 = mV/pH 127 = ℉	UINT	156, 157
Channel2-Value5-Valid	0 = Good 1 = Uncertain 2 = Bad 3 = Not assigned	UINT	158, 159

IO feedbacks

Parameter	Description	Data type	Bytes
Canister1	0 = Empty 1 = Full, not empty	UINT	160, 161
PressureSwitch	0 = Not active 1 = Active	UINT	162, 163
Canister3	0 = Empty 1 = Full, not empty	UINT	164, 165
Canister2	0 = Empty 1 = Fill, not empty	UINT	166, 167
Assembly1 Measure	0 = Off 1 = On	UINT	168, 169
Assembly1 Service	0 = Off 1 = On	UINT	170, 171
WaterValve	0 = Off 1 = On	UINT	172, 173
AirValve	0 = Off 1 = On	UINT	174,175
Pump1	0 = Off 1 = On	UINT	176,177
Pump2			178, 179

Parameter	Description	Data type	Bytes
Pump3			180, 181
CustomValve1	0 = Off 1 = On	UINT	182, 183
ChannelSwitch1	0 = Off 1 = On	UINT	184, 185
ChannelSwitch2	0 = Off 1 = On	UINT	186, 187
Assembly2 Measure	0 = Off 1 = On	UINT	188, 189
Assembly2 Service	0 = Off 1 = On	UINT	190, 191
CustomValve2	0 = Off 1 = On	UINT	192, 193
CustomValve3	0 = Off 1 = On	UINT	194, 195
CustomValve4	0 = Off 1 = On	UINT	196, 197
CustomValve5	0 = Off 1 = On	UINT	198, 199
CustomDo1	0 = Off 1 = On	UINT	200, 201
CustomDo2			202, 203
CustomDo3			204, 205
CustomDo4			206, 207
CustomDo5			208, 209
CustomDo6			210, 211
CustomDo7			212, 213
CustomDo8			214, 215
CustomDo9			216, 217
CustomDo10			218, 219
CustomDo11	Operating mode: Setting, if DO11 = 0 and DO12 = 0 Manual, if DO11 = 0 and DO12 = 1 Automatic, if DO11 = 1 and DO12 = 0 Remote access, if DO11 = 1 and DO12 = 1		220, 221
CustomDo12			222, 223
CustomDI1	0 = Off 1 = On	UINT	224, 225
CustomDI2			226, 227
CustomDI3			228, 229
CustomDI4			230, 231
CustomDI5			232, 233
CustomDI6			234, 235
CustomDI7			236, 237
CustomDI8			238, 239

Name of the device

Parameter	Description	Data type	Bytes
Device-Tag	TAG	STRING(32)	240 to 271

Device information

Parameter	Description	Data type	Bytes
Firmware	Firmware version	STRING(8)	272 to 279
ShortOrdercode	Short order code	STRING(16)	280 to 295
SerialNumber	Serial number	STRING(16)	296 to 311
ManufactoringDate	Date of manufacture	DATETIME	312 to 319
OrginalOrdercodeExt	Extended (original) manufacturing order code	STRING(64)	320 to 383
CurrentOrdercodeExt	Extended order code from last upgrade	STRING(64)	384 to 447

71561682

www.addresses.endress.com

Endress+Hauser

People for Process Automation