BA01795C/07/EN/03.21
71538075
2021-07-31

Operating Instructions
Unifit CPA842

Process assembly for hygienic and sterile applications

Endress+Hauser
People for Process Automation

Table of contents

1 Document information

1.1 Warnings

Structure of information	Meaning
DANGER **Causes (/consequences)** If necessary, Consequences of non-compliance (if applicable) ▶ Corrective action	This symbol alerts you to a dangerous situation. Failure to avoid the dangerous situation **will** result in a fatal or serious injury.
WARNING **Causes (/consequences)** If necessary, Consequences of non-compliance (if applicable) ▶ Corrective action	This symbol alerts you to a dangerous situation. Failure to avoid the dangerous situation **can** result in a fatal or serious injury.
CAUTION **Causes (/consequences)** If necessary, Consequences of non-compliance (if applicable) ▶ Corrective action	This symbol alerts you to a dangerous situation. Failure to avoid this situation can result in minor or more serious injuries.
NOTICE **Cause/situation** If necessary, Consequences of non-compliance (if applicable) ▶ Action/note	This symbol alerts you to situations which may result in damage to property.

1.2 Symbols used

- Additional information, tips
- Permitted or recommended
- Not permitted or not recommended
- Reference to device documentation
- Reference to page
- Reference to graphic
- Result of a step

1.3 Symbols on the device

- Reference to device documentation
- Do not dispose of products bearing this marking as unsorted municipal waste. Instead, return them to the manufacturer for disposal under the applicable conditions.

1.4 Documentation

Special Documentation for hygienic applications, SD02751C

2 Basic safety instructions

2.1 Requirements for personnel

- Installation, commissioning, operation and maintenance of the measuring system may be carried out only by specially trained technical personnel.
- The technical personnel must be authorized by the plant operator to carry out the specified activities.
- The electrical connection may be performed only by an electrical technician.
- The technical personnel must have read and understood these Operating Instructions and must follow the instructions contained therein.
- Faults at the measuring point may only be rectified by authorized and specially trained personnel.

Repairs not described in the Operating Instructions provided must be carried out only directly at the manufacturer's site or by the service organization.

2.2 Intended use

The Unifit CPA842 process assembly is designed for the installation of 12 mm sensors with a shaft nominal length of 120 mm in vessels, bioreactors and pipes.

Thanks to its design, it can be operated in pressurized systems (→ 25).

Use of the device for any purpose other than that described, poses a threat to the safety of people and of the entire measuring system and is therefore not permitted.

The manufacturer is not liable for damage caused by improper or non-designated use.

2.3 Workplace safety

As the user, you are responsible for complying with the following safety conditions:
- Installation guidelines
- Local standards and regulations
- Regulations for explosion protection

2.4 Operational safety

Before commissioning the entire measuring point:

1. Verify that all connections are correct.
2. Ensure that electrical cables and hose connections are undamaged.
3. Do not operate damaged products, and protect them against unintentional operation.
4. Label damaged products as defective.

During operation:

- If faults cannot be rectified:
  products must be taken out of service and protected against unintentional operation.

2.5 Product safety

The product is designed to meet state-of-the-art safety requirements, has been tested, and left the factory in a condition in which it is safe to operate. The relevant regulations and international standards have been observed.

3 Product description

3.1 Product design

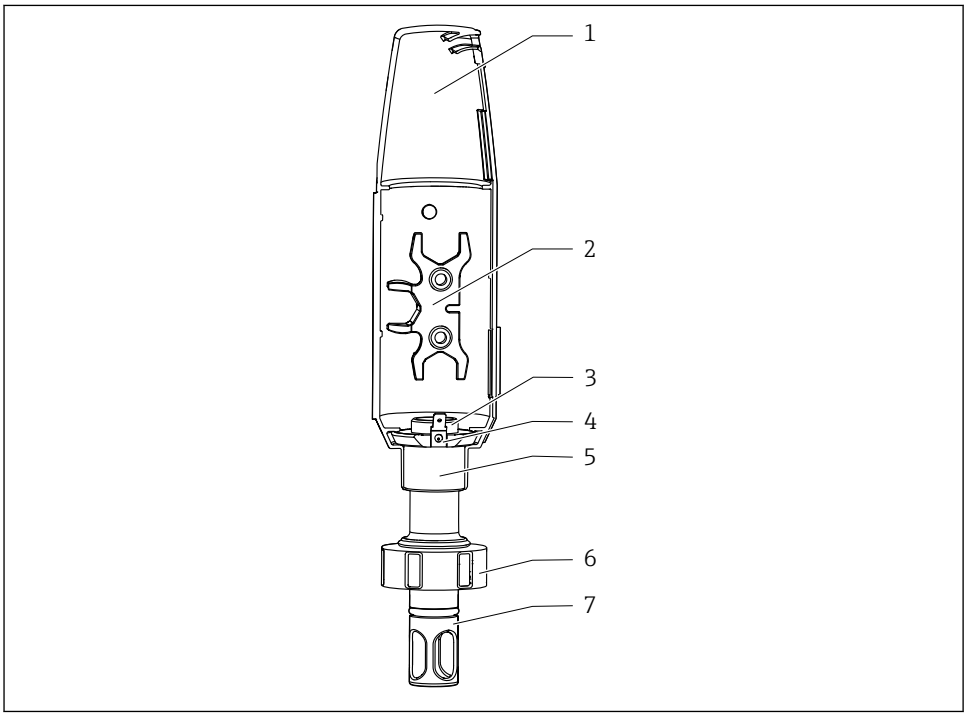

A0034734

1 Description of CPA842

1	*Protection cover*	*5*	*Fastening ring for PAL connection and/or protection cover*
2	*Auxiliary tool for mounting sensor*	*6*	*Union nut*
3	*Female thread PG13.5 for sensors with 120 mm shaft length and 12 mm diameter*	*7*	*Sensor protection (protective guard)*
4	*PAL connection for blade receptacle 6.3 mm*		

3.2 Process connections

Process connection	
DN25 standard	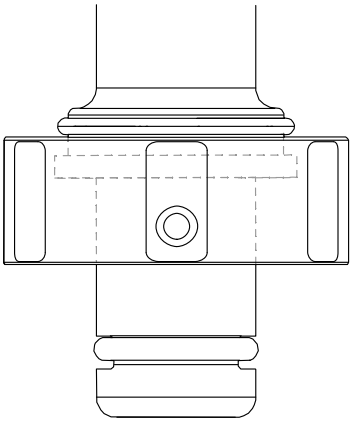
DN25 B.Braun port	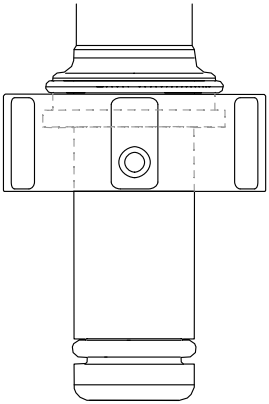 A0043028
Clamp 1.5" short with OD of 50.5 mm (1.99 in) ▪ Corresponds to NW 38 DIN 32676/ISO 2852 ▪ Compatible with NovAseptic process connections, pay attention to immersion depths ▪ The (pipe) internal diameter of the counterpiece must be greater than 28 mm (1.10 in).	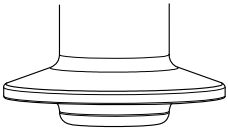

Process connection	
Clamp 1.5" long with OD of 50.5 mm (1.99 in) ▪ Complies with ASME-BPE 2009 ▪ Complies with DN40 DIN 32676 2001 ▪ Corresponds to NW 38 DIN 32676/ISO 2852 ▪ Compatible with NovAseptic process connections, pay attention to immersion depths ▪ The (pipe) internal diameter of the counterpiece must ge greater than 28 mm (1.10 in).	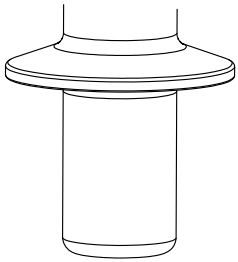
Clamp 2" with OD of 64 mm (2.52 in) ▪ Complies with ASME-BPE 2009 ▪ Complies with DN50 DIN 32676 2001 ▪ Corresponds to NW 51-40 DIN 32676/ISO 2852 ▪ Compatible with NovAseptic process connections, pay attention to immersion depths	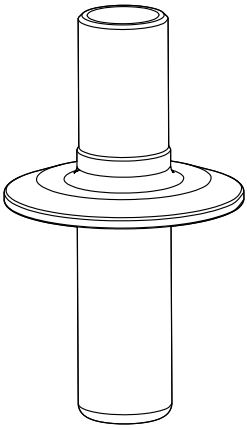
Clamp 1.5" angled at 15° with OD of 50.5 mm (1.99 in)	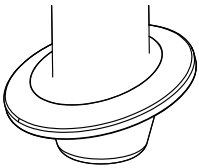

Process connection	
Dairy fitting DN50 DIN 11851 (EHEDG approval only with seal from Siersema)	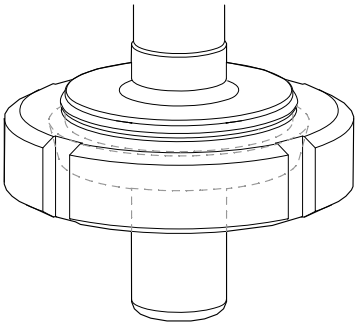 A0043050
Aseptic DN50 threaded DIN11864-1A (suitable for DIN 11866 Series A pipes)	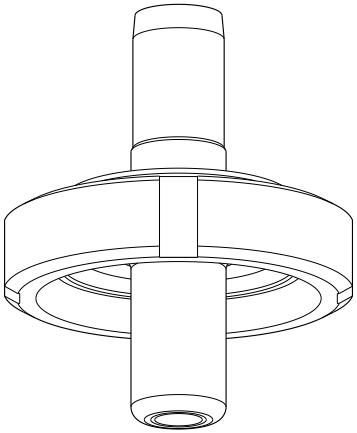 A0046280
Varivent flange N (DN40 to 125)	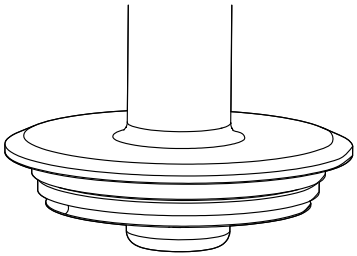 A0034979

4 Incoming acceptance and product identification

4.1 Incoming acceptance

1. Verify that the packaging is undamaged.
   ↳ Notify the supplier of any damage to the packaging.
   Keep the damaged packaging until the issue has been resolved.
2. Verify that the contents are undamaged.
   ↳ Notify the supplier of any damage to the delivery contents.
   Keep the damaged goods until the issue has been resolved.
3. Check that the delivery is complete and nothing is missing.
   ↳ Compare the shipping documents with your order.
4. Pack the product for storage and transportation in such a way that it is protected against impact and moisture.
   ↳ The original packaging offers the best protection.
   Make sure to comply with the permitted ambient conditions.

If you have any questions, please contact your supplier or your local Sales Center.

4.2 Scope of delivery

The scope of delivery comprises:
- Assembly in the version ordered
- Sensor seal (mounted)
- Process seal (mounted) for process connections: DN25 standard, DN25 B. and Braun port
- Dust caps to protect the Pg 13.5 thread
- Operating Instructions

▶ If you have any queries:
Please contact your supplier or local sales center.

4.3 Product identification

4.3.1 Nameplate

The nameplate provides you with the following information on your device:
- Manufacturer identification
- Order code
- Extended order code
- Serial number
- Wetted material
- 3.1 marking as per EN10204
- Ambient and process conditions
- Safety information and warnings
- Optional approvals

▶ Compare the information on the nameplate with the order.

4.3.2 Product identification

The order code and serial number of your product can be found in the following locations:
- On the nameplate
- In the delivery papers

Obtaining information on the product

1. Open www.endress.com.
2. Call up the site search (magnifying glass).
3. Enter a valid serial number.
4. Search.
   ↳ The product structure is displayed in a popup window.
5. Click on the product image in the popup window.
   ↳ A new window (**Device Viewer**) opens. All of the information relating to your device is displayed in this window as well as the product documentation.

Product page

www.endress.com/cpa842

Manufacturer's address

Endress+Hauser Conducta GmbH+Co. KG
Dieselstraße 24
D-70839 Gerlingen

5 Installation

5.1 Installation conditions

- The assembly is designed for installation on vessels and pipes. Suitable process connections must be available at the customer site for this purpose.
- The mounting seal, which seals the adapter from the process nozzle, must be provided by the customer (except in the versions DN25 standard and DN25 B. Braun port).
- Install the assembly only if the vessel is empty and the process is unpressurized.

The assembly can be mounted at any angle from 0° to 360°. The installation conditions of the sensor used must be complied with.

Example:

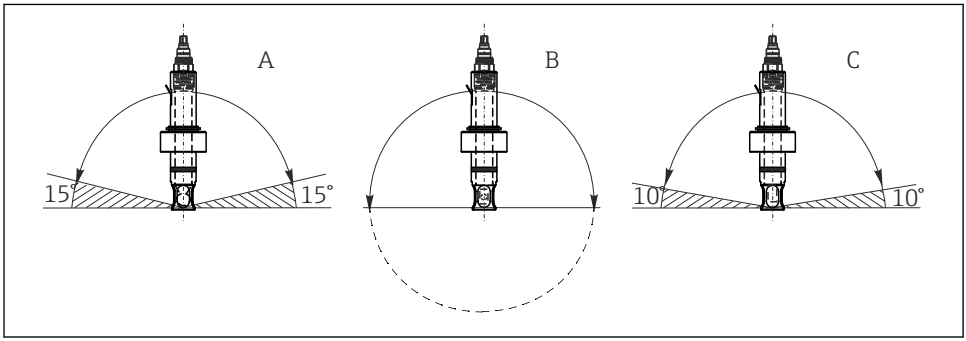

A0034731

2 Permitted angle of installation depending on sensor

A	Glass pH sensor:	Installation angle at least 15° from the horizontal
B	ISFET pH sensor, conductivity sensor, oxygen sensor (optical):	No restrictions, recommended 0 to 180°, where buildup can occur.
C	Oxygen sensor (amperometric):	Installation angle at least 10° from the horizontal

Only operate the CLS82E conductivity sensor with an assembly without sensor protection, to avoid influencing the measuring signal.

COS81E-*****U*** oxygen sensor (u-shaped spot cap)

Installation angle is limited to 0° to 180°

5.1.1 Dimensions

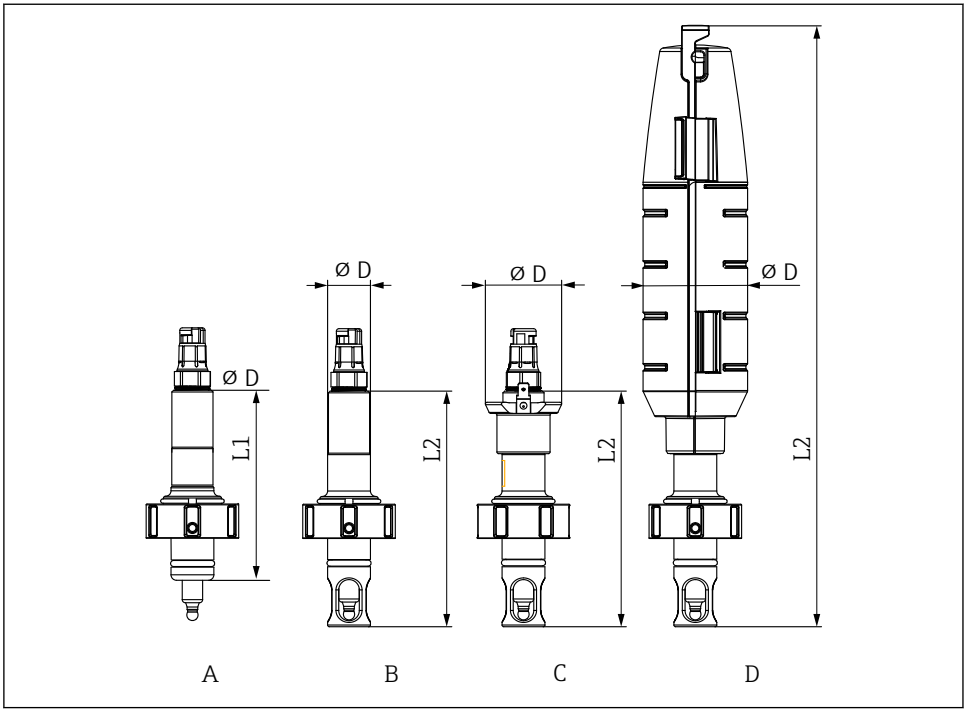

A0034653

3 Dimensions in mm (in)

	A	B	C	D
	Standard	Sensor protection	Sensor protection with PAL	Sensor protection with protection cover
	CPA842-XXXXXX1	CPA842-XXXXXX1+NB	CPA842-XXXXXX1+NANB	CPA842-XXXXXX1+NBNC
no sensor protection L1	110 (4.33)	-	-	-
with sensor protection L2	-	137.5 (5.41)	137.5 (5.41)	351 (13.81)
Diameter D	25 (1)	25 (1)	44.5 (1.75)	61 (2.40)

5.2 Immersion depth

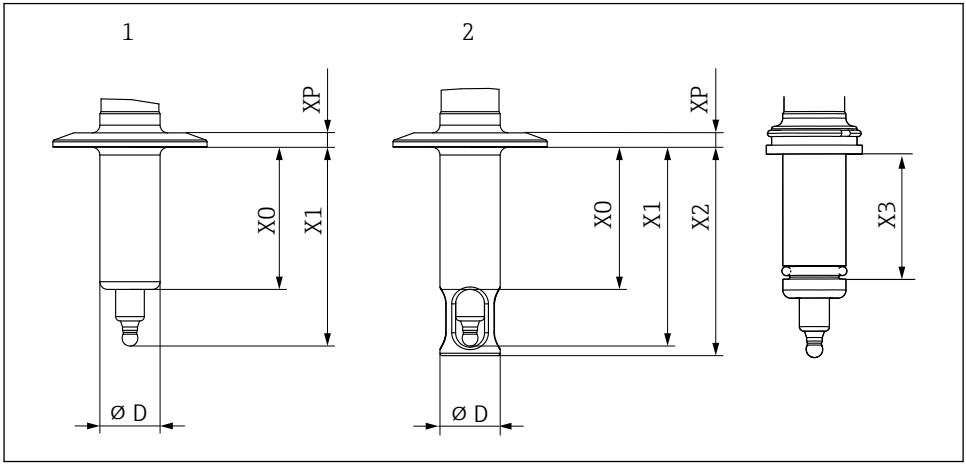

4 *Immersion depth in mm (in)*

Process connection	Feature 40	X0	X1	X2	D	XP	X3
DN25 standard	AA	37.5 (1.46)	61 (2.4)	65 (2.6)	25 (1)	11 (0.43)	29 (0.1)
DN25 B.Braun port	AB	57 (2.24)	80.5 (3.17)	84.5 (3.33)	25 (1)	11 (0.43)	49 (0.16)
Clamp 1.5" short	AC	6 (0.24)	29.5 (1.16)	33.5 (1.32)	25 (1)	7 (0.27)	
Clamp 1.5" long	OD	39 (1.53)	62.5 (2.46)	66.5 (2.61)	25 (1)	7 (0.27)	
Clamp 2"	AE	59 (2.23)	82.5 (3.25)	86.5 (3.4)	25 (1)	6 (0.24)	
Clamp 1.5" - angled at 15°	AF	17.8 (0.7)	41.3 (1.63)	--	25 (1)	6 (0.24)	
Dairy fitting DN50	AG	41 (1.61)	64.5 (2.53)	68.5 (2.7)	25 (1)	19.5 (0.77)	

Process connection	Feature 40	X0	X1	X2	D	XP	X3
Aseptic DN50 threaded DIN11864-1A	AK	41 (1.61)	64.5 (2.53)	68.5 (2.7)	25 (1)	19.5 (0.77)	
Varivent N 68mm DN40-125	AH	6 (0.24)	29.5 (1.16)	33.5 (1.32)	25 (1)	16.5 (0.65)	

5.3 Mounting the assembly

5.3.1 Installing the assembly in the process

WARNING

Escaping process medium

Risk of injury from high pressure, high temperatures or chemical hazards!

- Wear protective gloves, protective goggles and protective clothing.
- Mount the assembly only if vessels or pipes are empty and unpressurized.

1. Verify that the seal is correctly positioned between the sealing surface of the assembly and the process adapter.
2. Mount assembly via the process connection on the vessel or piping.
3. For versions DN25 standard, DN25 B.Braun port, dairy coupling DN50, aseptic DN50 threaded:

   Tighten the coupling nut by hand.
4. For clamp or Varivent versions:

   Secure with a suitable clip (to be provided by customer).

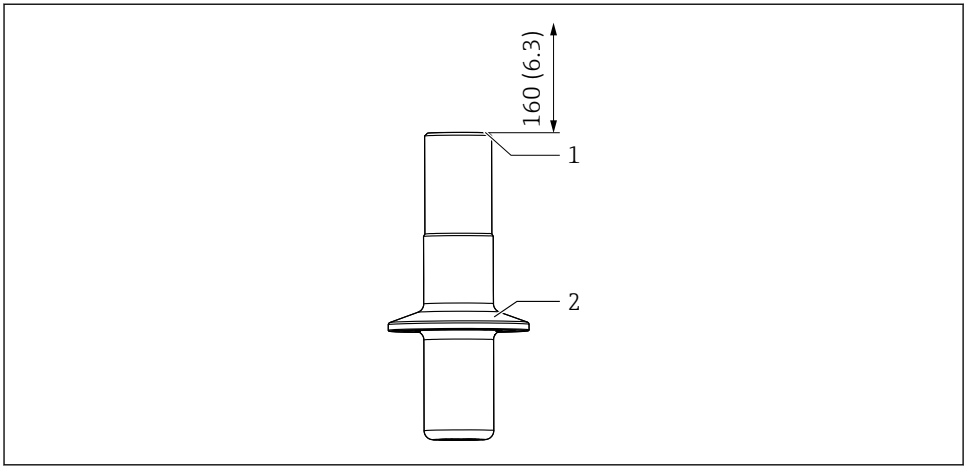

5 Installation

1 Space to allow for replacement of sensor in mm (in)
2 Process connection

Additional installation space is not required if a protection cover is used.

5.3.2 Installing sensor in assembly

WARNING

Escaping process medium

Risk of injury from high pressure, high temperatures or chemical hazards!

- Wear protective gloves, protective goggles and protective clothing.
- Mount the assembly only if vessels or pipes are empty and unpressurized.

NOTICE

The assembly can cause higher ambient temperatures at the sensor.

- A maximum temperature of 90 °C (194 °F) may be applied to the sensor head.
- Operate without a protection cover at atmospheric temperatures above 60 °C (140 °F).
- Provide for cooling if necessary, e.g. through increased convection.
- Contact the manufacturer if in doubt.

To prevent the molded seal from sticking to a sensor at high temperatures, lubricate the molded seal with a hygienic grease (for EPDM, FKM and FFKM, not for silicone), e.g. with Klüber Paraliq GTE 703 (can be ordered as an accessory). This makes it easier to remove the sensor again. Otherwise, there is a risk that the sensor will stick to the seal and break during removal (pH glass electrodes).

1. Remove protective cap from sensor.
2. Verify that there is an O-ring and thrust ring on the sensor.
3. For easier installation, immerse the sensor shaft in water.

4. Screw in the sensor. Tighten by hand initially and then with a socket wrench (AF 17 or AF19 for Memosens) by approx. ¼ rotation, approx. 3 Nm.
5. Connect the transmitter's measuring cable to the sensor.
6. For KCl sensors:
   Connect KCl supply line.

In the case of sensor OUSBT66 and other sensors with a stainless steel coupling, a thin layer of grease must be applied to the thread. (e.g. with Klüber Paraliq GTE 703 grease).

5.4 Post-installation check

- Assembly undamaged?
- Is the orientation correct?

6 Commissioning

Prior to initial commissioning, ensure that:
- all seals or O-rings are correctly seated (on the assembly and on the process connection)
- the sensor is correctly installed and connected

⚠ WARNING

Risk of injury from high pressure, high temperature or chemical hazards if process medium escapes.
- ▶ Before subjecting the assembly to the process pressure, verify that all connections are sealed!

7 Maintenance

⚠ WARNING

Risk of injury if medium escapes!
- ▶ Before each maintenance task, ensure that the process pipe or vessel is empty and rinsed.

7.1 Maintenance tasks

7.1.1 Cleaning the assembly

⚠ WARNING

Organic solvents containing halogens
Limited evidence of carcinogenicity! Dangerous for the environment with long-term effects!
- ▶ Do not use organic solvents that contain halogens.

WARNING

Thiocarbamide

Harmful if swallowed! Limited evidence of carcinogenicity! Possible risk of harm to the unborn child! Dangerous for the environment with long-term effects!

- Wear protective goggles, protective gloves and appropriate protective clothing.
- Avoid all contact with the eyes, mouth and skin.
- Avoid discharge into the environment.

The most common types of soiling and the appropriate cleaning agents in each case are shown in the following table.

Pay attention to the material compatibility of the materials to be cleaned.

Type of soiling	Cleaning agent
Greases and oils	Hot water or tempered, surfactant-containing (basic) agents or water-soluble organic solvents (e.g. ethanol)
Limescale deposits, metal hydroxide buildup, lyophobic biological buildup	approx. 3% hydrochloric acid
Sulfide deposits	Mixture of 3% hydrochloric acid and thiocarbamide (commercially available)
Protein buildup	Mixture of 3% hydrochloric acid and pepsin (commercially available)
Fibers, suspended substances	Pressurized water, possibly surface-active agents
Light biological buildup	Pressurized water

- Choose a cleaning agent to suit the degree and type of soiling.

To ensure stable and reliable measurements, the assembly and the sensor must be cleaned regularly. The frequency and intensity of the cleaning process depend on the medium.

1. Light soiling:
   Remove using suitable cleaning solutions (→ 18).
2. Heavy soiling:
   Remove using a soft brush and a suitable cleaning agent.
3. Persistent dirt:
   Soak the parts in a cleaning solution. Then clean the parts with a brush.

Typical cleaning interval, e. g. for drinking water: 12 months.

- You can also clean the assembly inline (CIP).
- You can also sterilize the assembly inline (SIP) if the sensor is SIP-capable.
- The assembly can be also be autoclaved if an appropriate sensor is used.

7.1.2 Leakage monitoring

1. 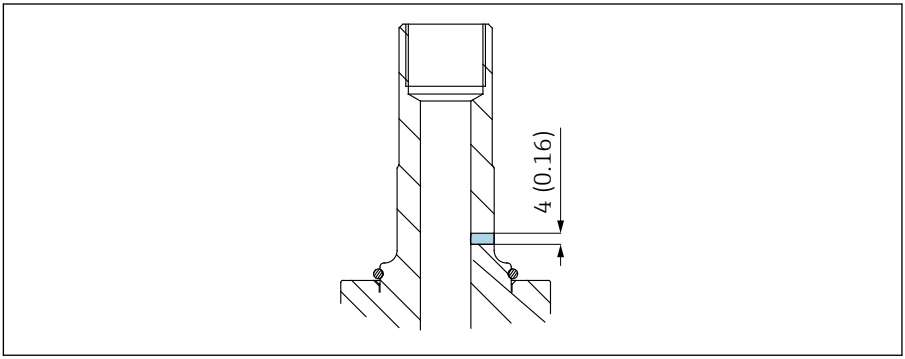

A0034691

   Check leakage monitoring at regular intervals (visual inspection).

2. If medium escapes at the monitoring hole,
   replace molded seal or O-ring.

The leak monitor is an integral part of the order for versions with 3-A (CPA842-******* +LB) or can be ordered separately (CPA842-*******+ND).

7.1.3 Replacing the seals

CAUTION

Risk of injury due to residual medium and elevated temperatures!

- ▶ When handling parts that are in contact with the medium, protect against residual medium and elevated temperatures.
- ▶ Wear protective goggles and safety gloves.

Preparation

To replace the seals in the assembly, you must interrupt the process and remove the assembly completely.

1. Interrupt the process. Pay attention to residual medium, residual pressure and elevated temperatures.
2. Remove the sensor.
3. Completely detach the assembly from the process connection.
4. Clean the assembly.

Replacing the seals

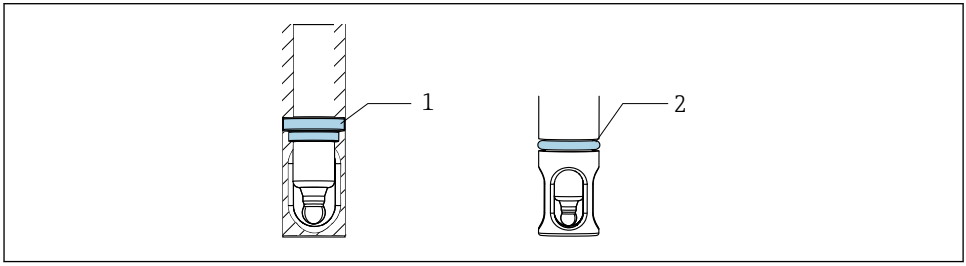

6 Position of seals

1 Molded seal (EPDM, FKM, FFKM) or O-ring (silicone) in the assembly
2 O-ring for process connection version (DN25 standard, DN25 B. and Braun port)

1. Replace the seals indicated. Use O-ring picker.
2. Lubricate the seals, for EPDM, FKM and FFKM use a food-grade grease (e.g. Klüber Paraliq GTE 703).
3. Install the sensor in the assembly.
4. Install the assembly in the process.
5. Restart the process.

To prevent the molded seal from sticking to a sensor at high temperatures, the molded seal should be lubricated with a hygienic grease. This makes it easier to remove the sensor again. Otherwise, there is a risk that the sensor will stick to the seal and break during removal (pH glass electrodes).

Operating times of seal depend on the material and the process:
- EPDM, FKM and FFKM = 600 CIP/SIP cycles
- Silicone = 50 CIP/SIP cycles

8 Repair

8.1 General information

- Only use spare parts from Endress + Hauser to guarantee the safe and stable functioning of the device.

Detailed information on the spare parts is available at:
www.endress.com/device-viewer

- Following repairs, check that the device is complete, in a safe condition and functioning correctly.

8.1.1 Replacing damaged parts

WARNING

Danger resulting from improper repair!

- Damage to the assembly, which compromises pressure safety, must be repaired **only** by authorized and qualified personnel.
- Following each repair and maintenance task, it is essential that the assembly be checked for leaks using appropriate procedures. Following this, the assembly must again comply with the specifications in the technical data.

- Replace all other damaged components immediately.

8.2 Spare parts

For more detailed information on spare parts kits, please refer to the "Spare Part Finding Tool" on the Internet:

www.endress.com/spareparts_consumables

The product-specific spare parts can be ordered via the "XPC0017" spare parts ordering structure.

8.3 Return

The product must be returned if repairs or a factory calibration are required, or if the wrong product was ordered or delivered. As an ISO-certified company and also due to legal regulations, Endress+Hauser is obliged to follow certain procedures when handling any returned products that have been in contact with medium.

To ensure the swift, safe and professional return of the device:

- Refer to the website www.endress.com/support/return-material for information on the procedure and conditions for returning devices.

8.4 Disposal

- Please observe local regulations!

9 Accessories

The following are the most important accessories available at the time this documentation was issued.

- For accessories not listed here, please contact your Service or Sales Center.

For more detailed information on the accessories, please refer to the "Spare Part Finding Tool" on the Internet:

www.endress.com/spareparts_consumables

The product-specific accessories can be ordered via the order structure for CPA842 and the spare parts order structure "XPC0017".

9.1 Installation accessories

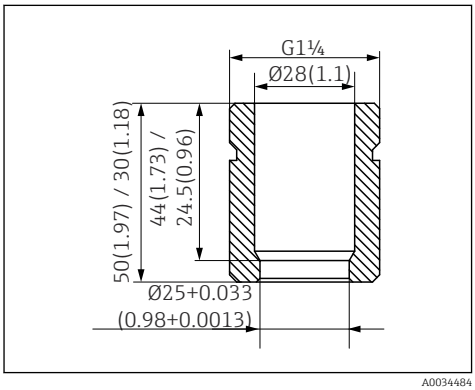

7 *Welding socket, straight, in mm (in)*

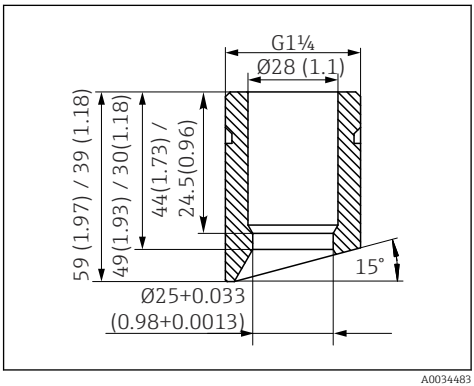

8 *Welding socket, angled, in mm (in)*

Safety welding socket DN25 (B. Braun)
- Straight, stainless steel 1.4435, L=50
- CPA842-*****AB+PL

Safety welding socket DN25 (B. Braun)
- Angled, stainless steel 1.4435, L=50/60
- CPA842-*****AB+PM

Safety welding socket DN25 (standard)
- Straight, stainless steel 1.4435, L=30
- CPA842-*****AA+PI

Safety welding socket DN25 (standard)
- Angled, stainless steel 1.4435, L=30/40
- CPA842-*****AA+PK

Dummy plug
- Dummy plug G1 1/4 DN25 (standard), 316L, FKM-FDA
  CPA842-*****AA+PN
- Dummy plug G1 1/4 DN25 (B. Braun), 316L, FKM-FDA
  CPA842-*****AB+PO

Protection cover
Bend guard for sensor cable, PP conductive

Sensor
- Sensor dummy 120mm, 316L, Ra=0.38
- CPA842-*******+PQ

Grease
- Klüber Paraliq GTE 703 grease (60g)
- CPA842-*******+R8

9.2 Seals

- Kit, seal, wetted, EPDM
- Kit, seal, wetted, FKM
- Kit, FKM seals, DN25 G1 1/4, wetted parts
- Kit, FFKM seals, excl. G1 1/4, wetted parts
- Kit, silicone seals (O-ring)

9.3 Sensors (selection)

Memosens CPS61E
- pH sensor for bioreactors in life sciences and for the food industry
- Digital with Memosens 2.0 technology
- Product Configurator on the product page: www.endress.com/cps61e

Technical Information TI01566C

Memosens CPS11E
- pH sensor for standard applications in process and environmental engineering
- Digital with Memosens 2.0 technology
- Product Configurator on the product page: www.endress.com/cps11e

Technical Information TI01493C

Memosens CPS12E
- ORP sensor for standard applications in process and environmental engineering
- Digital with Memosens 2.0 technology
- Product Configurator on the product page: www.endress.com/cps12e

Technical Information TI01494C

Memosens CPS41E
- pH sensor for process technology
- With ceramic junction and KCl liquid electrolyte
- Digital with Memosens 2.0 technology
- Product Configurator on the product page: www.endress.com/cps41e

Technical Information TI01495C

Memosens CPS76E
- pH/ORP sensor for process technology
- Digital with Memosens 2.0 technology
- Product Configurator on the product page: www.endress.com/cps76e

Technical Information TI01601C

Memosens CPS16E
- pH/ORP sensor for standard applications in process technology and environmental engineering
- Digital with Memosens 2.0 technology
- Product Configurator on the product page: www.endress.com/cps16e

Technical Information TI01600C

Memosens CPS96E
- pH/ORP sensor for heavily polluted media and suspended solids
- Digital with Memosens 2.0 technology
- Product Configurator on the product page: www.endress.com/cps96e

Technical Information TI01602C

Memosens CPS77D
- Sterilizable and autoclavable ISFET sensor for pH measurement
- Product Configurator on the product page: www.endress.com/cps77d

Technical Information TI01396

Memosens COS81E
- Hygienic optical oxygen sensor with maximum measurement stability over multiple sterilization cycles
- Digital with Memosens 2.0 technology
- Product Configurator on the product page: www.endress.com/cos81e

Technical Information TI01558C

Memosens COS22E
- Hygienic amperometric oxygen sensor with maximum measurement stability over multiple sterilization cycles
- Digital with Memosens 2.0 technology
- Product Configurator on the product page: www.endress.com/cos22e

Technical Information

Memosens CLS82E
- Hygienic conductivity sensor
- Digital with Memosens 2.0 technology
- Product Configurator on the product page: www.endress.com/cls82e

Technical Information TI01529C

OUSBT66
- NIR absorption sensor for the measurement of cell growth and biomass
- Sensor version suitable for pharmaceutical industry
- Product Configurator on the product page: www.endress.com/ousbt66

Compatible with versions with OPL 5 and 10 mm

Technical Information TI00469C

10 Technical data

10.1 Environment

10.1.1 Atmospheric temperature

−15 to 70 °C (5 to 158 °F)

10.1.2 Storage temperature

−15 to 70 °C (5 to 158 °F)

10.2 Process

10.2.1 Process temperature

Pay attention to electrode specification.

−15 to 140 °C (+5 to 280 °F)

10.2.2 Process pressure

Pay attention to electrode specification.

16 bar (232 psi) up to 140 °C (284 °F)

10.2.3 Flow velocity

NOTICE

Excessively high flow velocities may damage or destroy the sensors.
- ▶ Pay attention to the specification of the installed sensor.

To avoid cavitation, flow velocities in the process should be < 7.5 m/s (24.6 ft/s) at 1 bar and 20°C (68°F).

10.2.4 Pressure/temperature ratings

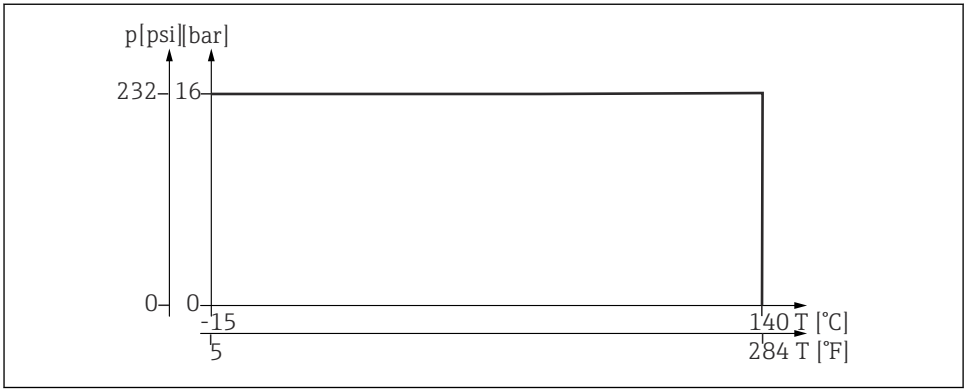

9 Temperature values for stainless steel 1.4435 (AISI 316 L)

10.3 Mechanical construction

10.3.1 Dimensions

→ 13

10.3.2 Weight

Assembly with process connection AA … AK:	0.3 to 1.4 kg (0.7 to 3.1 lbs) depending on version
Protection cover:	approx. 0.2 kg (0.4 lbs)

10.3.3 Materials

In contact with medium

Seals:	Molded seal made of EPDM, FDA-compliant as per 21CFR 177.2600, USP Class VI Molded seal made of FKM, FDA-compliant as per 21CFR 177.2600, USP Class VI O-ring made of silicone, FDA-compliant as per 21CFR 177.2600, USP Class VI Molded seal FFKM, FDA-compliant as per 21CFR 177.2600, USP Class V
Assembly:	Stainless steel 1.4435 (AISI 316 L) (versions available with surface roughness Ra ≤ 0.76 µm or Ra ≤ 0.38 µm)
Lubricant for seals	Klüber Paraliq GTE703 USP87 Class VI, FDA 21CFR 178.3570, USDA-H1, NSF51, NSF61

Versions with silicone seals are not greased

Not in contact with medium

Mounted parts:	Stainless steel Stahl 1.4308 as per BN2 (AISI 316L) oder 1.4404 (AISI 316L)
Pal connection:	1.4301
Protection cover:	PP137 conductive

10.3.4 Process connections

→ 📄 7

Index

71538075

www.addresses.endress.com

Endress+Hauser

People for Process Automation