BA02015P/00/EN/04.21
71547518
2021-11-30

Valid as of version
01.00.zz (Device firmware)

Operating Instructions
Deltabar PMD78B

Differential pressure measurement
HART

Endress+Hauser
People for Process Automation

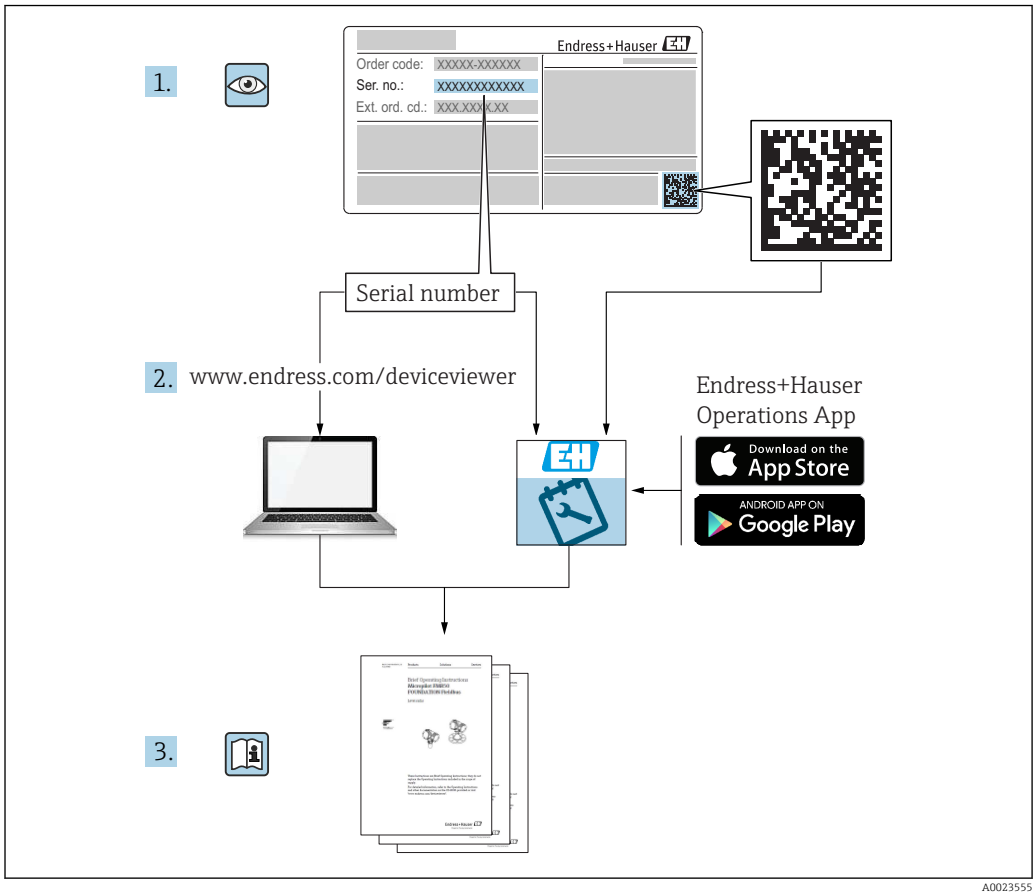

- Make sure the document is stored in a safe place such that it is always available when working on or with the device
- Avoid danger to individuals or the facility: read the "Basic safety instructions" section carefully, as well as all other safety instructions in the document that are specific to working procedures

The manufacturer reserves the right to modify technical data without prior notice. The Endress+Hauser sales organization will supply you with current information and updates to these instructions.

Table of contents

1 About this document 5
1.1 Document function 5
1.2 Symbols 5
1.3 List of abbreviations 7
1.4 Turn down calculation 7
1.5 Documentation 8
1.6 Registered trademarks 8

2 Basic safety instructions 9
2.1 Requirements for the personnel 9
2.2 Intended use 9
2.3 Workplace safety 9
2.4 Operational safety 9
2.5 Product safety 10
2.6 Functional Safety SIL (optional) 10
2.7 IT security 10
2.8 Device-specific IT security 10

3 Product description 11
3.1 Product design 11

4 Incoming acceptance and product identification 14
4.1 Incoming acceptance 14
4.2 Product identification 14
4.3 Storage and transport 15

5 Mounting 16
5.1 Mounting requirements 16
5.2 Mounting the device 20
5.3 Post-mounting check 29

6 Electrical connection 30
6.1 Connecting requirements 30
6.2 Connecting the device 30
6.3 Ensuring the degree of protection 34
6.4 Post-connection check 35

7 Operation options 36
7.1 Overview of operation options 36
7.2 Operating keys and DIP switches on the electronic insert 36
7.3 Structure and function of the operating menu 36
7.4 Access to the operating menu via the local display 37
7.5 Access to the operating menu via the operating tool 39
7.6 HistoROM 40

8 System integration 41
8.1 Overview of device description files 41
8.2 Measured variables via HART protocol 41

9 Commissioning 43
9.1 Preliminaries 43
9.2 Function check 43
9.3 Establishing a connection via FieldCare and DeviceCare 44
9.4 Configuring the device address via software . . 44
9.5 Setting the operating language 45
9.6 Device configuration 45
9.7 "Simulation" submenu 54
9.8 Protecting settings from unauthorized access 54

10 Operation 56
10.1 Reading off the device locking status 56
10.2 Reading off measured values 56
10.3 Adapting the device to process conditions 56

11 Diagnostics and troubleshooting . . . 58
11.1 General troubleshooting 58
11.2 Diagnostic information on local display 62
11.3 Diagnostic event in the operating tool 64
11.4 Adapting the diagnostic information 64
11.5 Queued diagnostic messages 64
11.6 Diagnostic list 64
11.7 Event logbook 67
11.8 Resetting the device 69
11.9 Device information 69
11.10 Firmware history 69

12 Maintenance 70
12.1 Maintenance tasks 70

13 Repair 71
13.1 General notes 71
13.2 Spare parts 71
13.3 Replacement 71
13.4 Return 73
13.5 Disposal 73

14 Accessories 74
14.1 Device-specific accessories 74
14.2 Device Viewer 74

15 Technical data 75
15.1 Output 75
15.2 Environment 78
15.3 Process 81

Index 87

1 About this document

1.1 Document function

These Operating Instructions contain all the information that is required in various phases of the life cycle of the device: from product identification, incoming acceptance and storage, to mounting, connection, operation and commissioning through to troubleshooting, maintenance and disposal.

1.2 Symbols

1.2.1 Safety symbols

⚠ DANGER

This symbol alerts you to a dangerous situation. Failure to avoid this situation will result in serious or fatal injury.

⚠ WARNING

This symbol alerts you to a dangerous situation. Failure to avoid this situation can result in serious or fatal injury.

⚠ CAUTION

This symbol alerts you to a dangerous situation. Failure to avoid this situation can result in minor or medium injury.

NOTICE

This symbol contains information on procedures and other facts which do not result in personal injury.

1.2.2 Electrical symbols

Ground connection: ⏚

Terminal for connection to the grounding system.

1.2.3 Symbols for certain types of information

Permitted: ✓

Procedures, processes or actions that are permitted.

Forbidden: ✗

Procedures, processes or actions that are forbidden.

Additional information:

Reference to documentation:

Reference to page:

Series of steps: 1., 2., 3.

Result of an individual step:

1.2.4 Symbols in graphics

Item numbers: 1, 2, 3 ...

Series of steps: 1., 2., 3.

Views: A, B, C, ...

1.2.5 Symbols on the device

Safety instructions: →
Observe the safety instructions contained in the associated Operating Instructions.

1.3 List of abbreviations

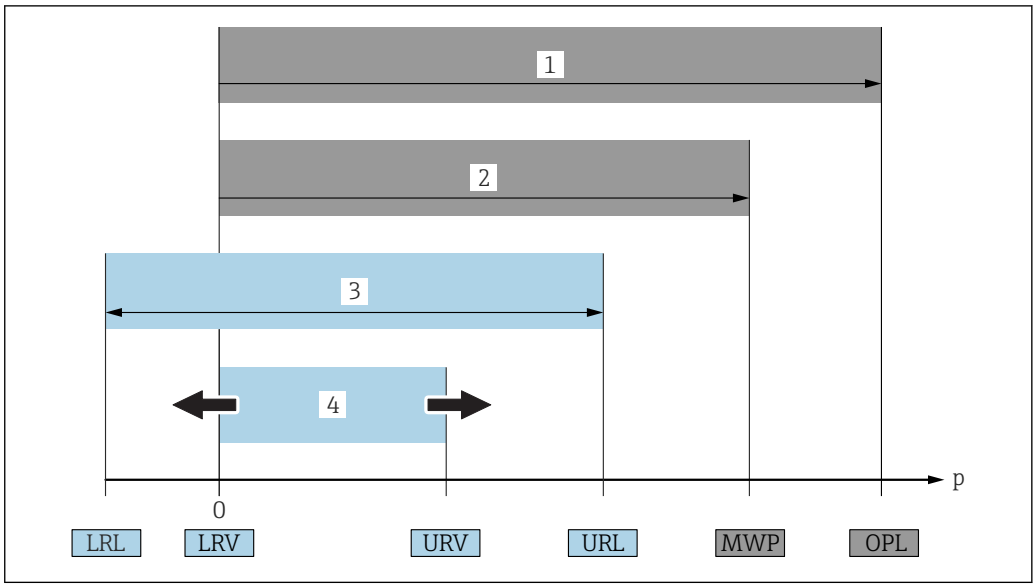

1 OPL: The OPL (overpressure limit = sensor overload limit) for the device depends on the lowest-rated element, with regard to pressure, of the selected components, i.e. the process connection has to be taken into consideration in addition to the measuring cell. Pay attention to the pressure/temperature dependency.
2 MWP: The MWP (maximum working pressure) for the sensors depends on the lowest-rated element, with regard to pressure, of the selected components, i.e. the process connection has to be taken into consideration in addition to the measuring cell. Pay attention to the pressure/temperature dependency. The MWP may be applied at the device for an unlimited period of time. The MWP can be found on the nameplate.
3 The maximum sensor measuring range corresponds to the span between the LRL and URL. This sensor measuring range is equivalent to the maximum calibratable/adjustable span.
4 The calibrated/adjusted span corresponds to the span between the LRV and URV. Factory setting: 0 to URL. Other calibrated spans can be ordered as customized spans.
p Pressure
LRL Lower range limit
URL Upper range limit
LRV Lower range value
URV Upper range value
TD Turn down. Example - see the following section.

1.4 Turn down calculation

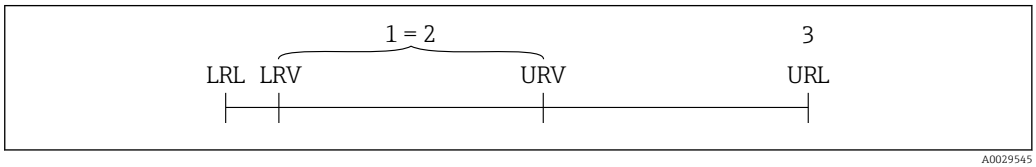

1 Calibrated/adjusted span
2 Zero point-based span
3 Upper range limit

Example:
- Sensor: 16 bar (240 psi)
- Upper range limit (URL) = 16 bar (240 psi)
- Calibrated/adjusted span: 0 to 8 bar (0 to 120 psi)
- Lower range value (LRV) = 0 bar (0 psi)
- Upper range value (URV) = 8 bar (120 psi)

$$TD = \frac{URL}{|URV - LRV|}$$

In this example, the TD is 2:1. This span is based on the zero point.

1.5 Documentation

All available documents can be downloaded using:
- the serial number of the device (see cover page for description) or
- the data matrix code of the device (see cover page for description) or
- the "Downloads" area of the website www.endress.com

1.5.1 Supplementary device-dependent documentation

Additional documents are supplied depending on the device version ordered: Always comply strictly with the instructions in the supplementary documentation. The supplementary documentation is an integral part of the device documentation.

1.6 Registered trademarks

HART®
Registered trademark of the FieldComm Group, Austin, Texas, USA

Bluetooth®
The Bluetooth® wordmark and logos are registered trademarks of Bluetooth SIG, Inc. and any use of these trademarks by Endress+Hauser is licensed. Other trademarks and trade names are those of their respective owners.

Apple®
Apple, the Apple logo, iPhone, and iPod touch are trademarks of Apple Inc., registered in the U.S. and other countries. App Store is a service mark of Apple Inc.

Android®
Android, Google Play and the Google Play logo are trademarks of Google Inc.

2 Basic safety instructions

2.1 Requirements for the personnel

The personnel for installation, commissioning, diagnostics and maintenance must fulfill the following requirements:
- Trained, qualified specialists must have a relevant qualification for this specific function and task
- Are authorized by the plant owner/operator
- Are familiar with federal/national regulations
- Before beginning work, the specialist staff must have read and understood the instructions in the Operating Instructions and supplementary documentation as well as in the certificates (depending on the application)
- Follow instructions and comply with conditions

The operating personnel must fulfill the following requirements:
- Being instructed and authorized according to the requirements of the task by the facility's owner-operator
- Following the instructions in these Operating Instructions

2.2 Intended use

The Deltabar is a differential pressure transmitter for measuring pressure, flow, level and differential pressure.

2.2.1 Incorrect use

The manufacturer is not liable for damage caused by improper or non-intended use.

Verification for borderline cases:
- For special fluids and fluids for cleaning, Endress+Hauser is glad to provide assistance in verifying the corrosion resistance of fluid-wetted materials, but does not accept any warranty or liability.

2.3 Workplace safety

When working on and with the device:
- Wear the required personal protective equipment according to federal/national regulations.
- Switch off the supply voltage before connecting the device.

2.4 Operational safety

Risk of injury!
- Operate the device only if it is in proper technical condition, free from errors and faults.
- The operator is responsible for the interference-free operation of the device.

Modifications to the device

Unauthorized modifications to the device are not permitted and can lead to unforeseeable dangers:
- If, despite this, modifications are required, consult with Endress+Hauser.

Repair

To ensure continued operational safety and reliability:
- Carry out repairs on the device only if they are expressly permitted.
- Observe federal/national regulations pertaining to the repair of an electrical device.

- Use original spare parts and accessories from Endress+Hauser only.

Hazardous area

To eliminate the risk of danger to persons or the facility when the device is used in the approval-related area (e.g. explosion protection, pressure equipment safety):
- Check the nameplate to verify if the device ordered can be put to its intended use in the approval-related area.
- Observe the specifications in the separate supplementary documentation that is an integral part of these Instructions.

2.5 Product safety

This device is designed in accordance with good engineering practice to meet state-of-the-art safety requirements, has been tested, and left the factory in a condition in which it is safe to operate.

It meets general safety standards and legal requirements. It also complies with the EC directives listed in the device-specific EC Declaration of Conformity. Endress+Hauser confirms this by affixing the CE mark to the device.

2.6 Functional Safety SIL (optional)

The Functional Safety Manual must be strictly observed for devices that are used in functional safety applications.

2.7 IT security

Endress+Hauser can only provide a warranty if the device is installed and used as described in the Operating Instructions. The device is equipped with security mechanisms to protect it against any inadvertent changes to the device settings. IT security measures in line with operators' security standards and designed to provide additional protection for the device and device data transfer must be implemented by the operators themselves.

2.8 Device-specific IT security

The device offers specific functions to support protective measures by the operator. These functions can be configured by the user and guarantee greater in-operation safety if used correctly. An overview of the most important functions is provided in the following section:

- Write protection via hardware write protection switch
- Access code to change the user role (applies for operation via display, Bluetooth or FieldCare, DeviceCare, AMS, PDM)

3 Product description

3.1 Product design

3.1.1 Measuring cell for differential pressure with metal process membrane

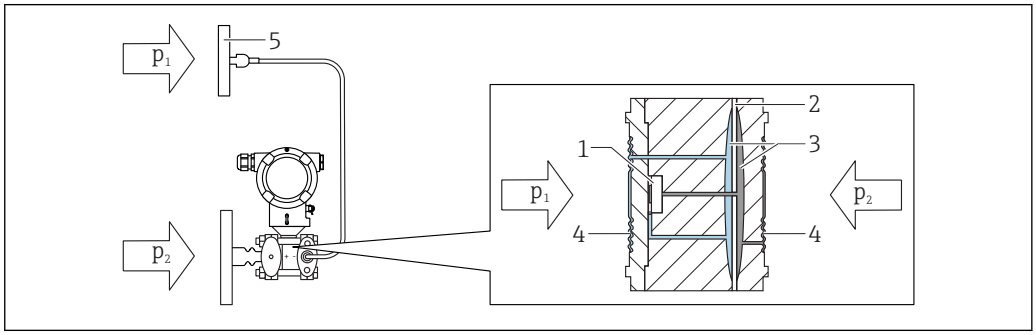

1 *Capillary on the second side (P1) is optional*

1 Measuring element
2 Middle diaphragm
3 Fill fluid
4 Internal process membrane
5 Process membrane of the diaphragm seal
p_1 Pressure 1
p_2 Pressure 2

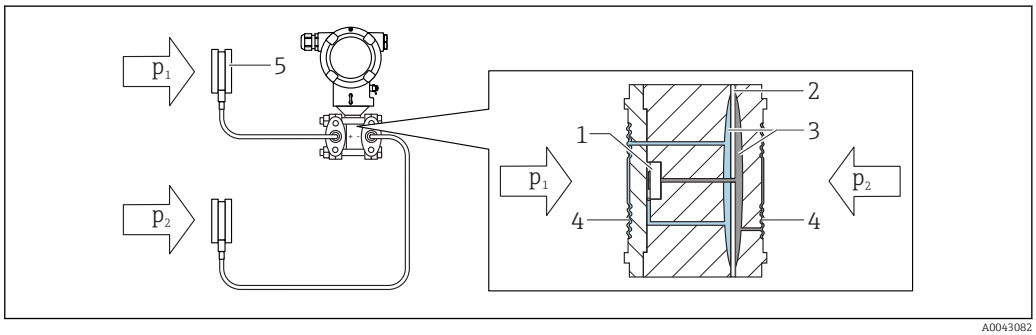

1 Measuring element
2 Middle diaphragm
3 Fill fluid
4 Internal process membrane
5 Process membrane of the diaphragm seal
p_1 Pressure 1
p_2 Pressure 2

The pressures applied are transferred from the process membrane of the diaphragm seal to the internal process membrane of the measuring cell by means of an incompressible fill fluid, causing a deflection of the process membrane on both sides. A second fill fluid transfers the pressure to a side of the measuring element where a resistance bridge is located (semiconductor technology). The differential pressure-dependent change in the bridge output voltage is measured and processed further.

Applications for diaphragm seals

Diaphragm seal systems are used if the process and the device need to be separated.
Diaphragm seal systems offer clear advantages in the following instances:
- In the case of extreme process temperatures - through the use of temperature isolators or capillaries
- In the case of strong vibrations - decouple the process from the device by using a capillary
- In the case of aggressive or corrosive media - through the use of high-durability membrane materials
- In the case of media that crystallize or contain solids - through the choice of suitable coatings
- In the case of heterogeneous and fibrous process media
- If extreme measuring point cleaning is necessary, or in the event of very damp mounting locations
- For mounting locations that are difficult to access

3.1.2 Level measurement (volume and mass):

Diaphragm seal on both sides with temperature isolator

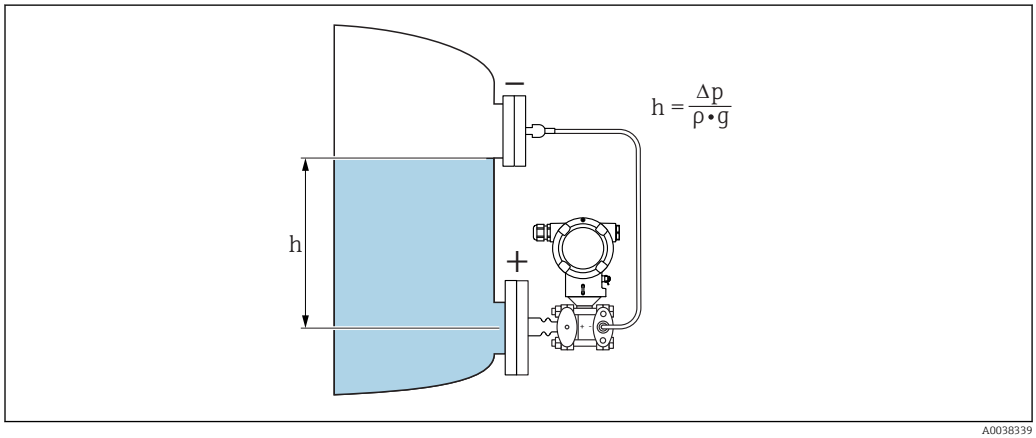

A0038339

h *Height (level)*
Δp *Differential pressure*
ρ *Density of the medium*
g *Gravitation constant*

Diaphragm seal on both sides with capillary

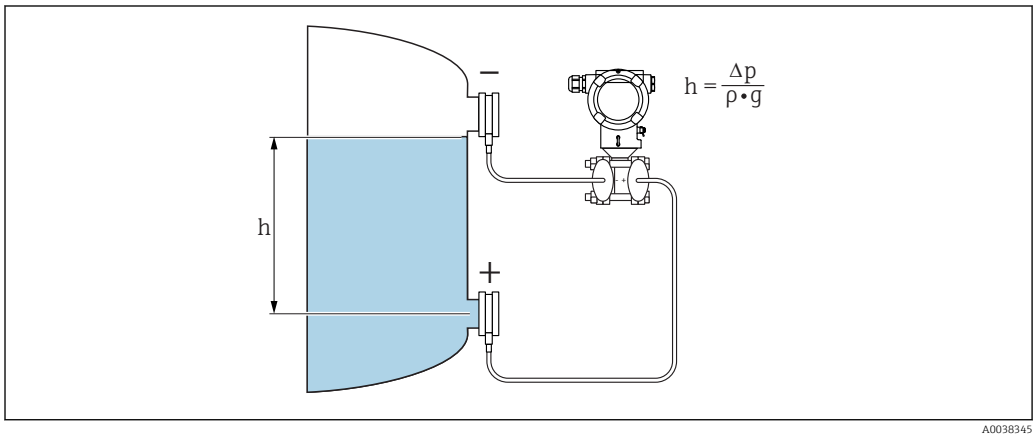

A0038345

h *Height (level)*
Δp *Differential pressure*
ρ *Density of the medium*
g *Gravitation constant*

Advantages:

- Volume and mass measurements in any vessel shape with a freely programmable characteristic curve
- Has a wide range of uses, e.g.:
  - For level measurement in vessels with pressure overlay
  - For foam formation
  - In vessels with agitators or screen fittings
  - For liquid gases
  - For standard level measurement

4 Incoming acceptance and product identification

4.1 Incoming acceptance

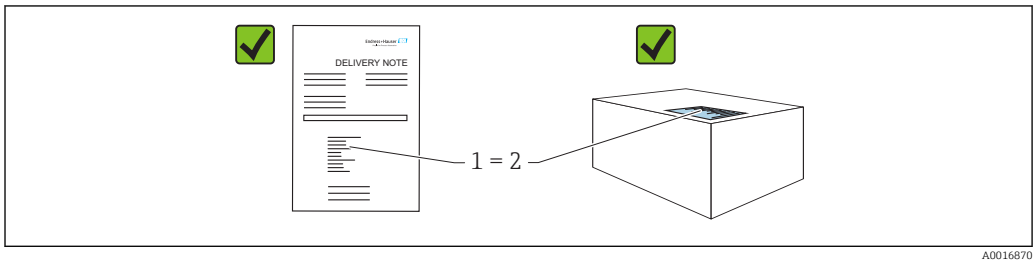

A0016870

- Is the order code on the delivery note (1) identical to the order code on the product sticker (2)?
- Are the goods undamaged?
- Do the data on the nameplate correspond to the order specifications and the delivery note?
- Is the documentation available?
- If required (see nameplate): are the Safety Instructions (XA) provided?

If you can answer "no" to any of these questions, please contact Endress+Hauser.

4.1.1 Scope of delivery

The scope of delivery comprises:
- Device
- Optional accessories

Accompanying documentation:
- Brief Operating Instructions
- Final inspection report
- Additional Safety Instructions for devices with approvals (e.g. ATEX, IECEx, NEPSI, etc.)
- Optional: factory calibration form, test certificates

The Operating Instructions are available on the Internet at:

www.endress.com → Download

4.2 Product identification

The following options are available for the identification of the measuring device:
- Nameplate specifications
- Order code with breakdown of the device features on the delivery note
- Enter the serial numbers from the nameplates in *Device Viewer* (www.endress.com/deviceviewer): all the information about the measuring device is displayed.

4.2.1 Manufacturer address

Endress+Hauser SE+Co. KG
Hauptstraße 1
79689 Maulburg, Germany

Place of manufacture: See nameplate.

4.2.2 Nameplate

Different nameplates are used depending on the device version.

The nameplates contain the following information:
- Manufacturer name and device name
- Address of the certificate holder and country of manufacture
- Order code and serial number
- Technical data
- Approval-specific information

Compare the data on the nameplate with your order.

4.3 Storage and transport

4.3.1 Storage conditions

- Use the original packaging
- Store the measuring device in clean and dry conditions and protect from damage caused by shocks

Storage temperature range

See Technical Information.

4.3.2 Transporting the product to the measuring point

⚠ WARNING

Incorrect transport!

Housing and membrane may become damaged, and there is a risk of injury!

► Transport the measuring device to the measuring point in the original packaging.

⚠ WARNING

Incorrect transport!

Capillaries may become damaged, and there is a risk of injury!

► Do not use capillaries as a carrying aid for the diaphragm seals.

5 Mounting

NOTICE

The device can be damaged if handled incorrectly!

- The removal of the screws with item number (1) is not permissible under any circumstances and will void the warranty.

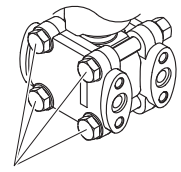

A0025336

5.1 Mounting requirements

5.1.1 General instructions

- Do not clean or touch process membrane with hard and/or pointed objects
- Do not remove process membrane protection until shortly before installation

Always firmly tighten the housing cover and the cable entries.

1. Counter-tighten the cable entries.
2. Tighten the coupling nut.

5.1.2 Installation instructions

- To ensure optimal readability of the local display, adjust the housing and local display
- Endress+Hauser offers a mounting bracket to mount the device on pipes or walls
- Use flushing rings for flanges, flange seals and pancake seals if buildup or clogging can be expected at the process membrane
  - The flushing ring is clamped between the process connection and the flange, flange seal or pancake seal
  - Material buildup in front of the process membrane is flushed away and the pressure chamber is vented via the two lateral flushing holes
- When measuring in media containing solids (e.g. dirty liquids), installing separators and drain valves is useful for capturing and removing sediment
- Using a valve manifold allows for easy commissioning, installation and maintenance without interrupting the process
- When mounting the device, establishing the electrical connection and during operation: prevent the penetration of moisture into the housing
- Point the cable and plug downwards as much as possible to prevent moisture from entering (e.g. rainwater or condensation)

5.1.3 Installation instructions for devices with diaphragm seals

NOTICE

Incorrect handling!

Damage to the device!

- The diaphragm seal and pressure transmitter form a closed, calibrated system which has been filled with diaphragm seal fill fluid. Never open any of the holes for fill fluid.
- Ensure strain relief to prevent the capillary from bending (bending radius ≥ 100 mm (3.94 in).
- Do not use capillaries as a carrying aid for the diaphragm seals.
- Observe the application limits of the diaphragm seal fill fluid.

General information

In the case of devices with diaphragm seals and capillaries, the zero point shift caused by the hydrostatic pressure of the filling fluid column in the capillaries must be taken into account when selecting the measuring cell. Perform zero point adjustment if necessary. If a measuring cell with a small measuring range is selected, a position adjustment can cause the sensor to go over range (position adjustment due to zero point offset, caused by the orientation of the liquid column of the fill fluid).

For devices with a capillary, use a suitable bracket (mounting bracket) for mounting.

When mounting, sufficient strain relief must be provided for the capillary to prevent the capillary from bending (capillary bending radius ≥ 100 mm (3.94 in)).

Mount the capillary so that it is vibration-free (in order to avoid additional pressure fluctuations).

Do not mount capillaries in the vicinity of heating or cooling lines and protect them against direct sunlight.

More detailed installation instructions are provided in the Applicator "Sizing Diaphragm Seal".

Vacuum applications

In vacuum applications, mount the pressure transmitter below the diaphragm seal. This prevents additional vacuum loading of the diaphragm seal caused by the presence of fill fluid in the capillary.

If the pressure transmitter is mounted above the diaphragm seal, do not exceed the maximum height difference h1. The height difference h1 is shown in the Applicator "Sizing Diaphragm Seal".

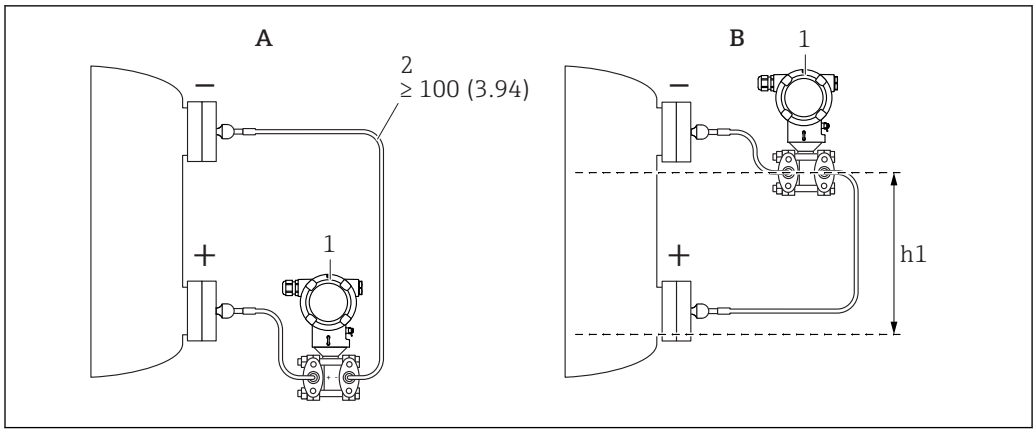

Unit of measurement mm (in)

A Recommended installation in a vacuum application
B Installation above the lower diaphragm seal
h1 Height difference (is shown in the Applicator "Sizing Diaphragm Seal")
1 Device
2 Bending radius ≥ 100 mm (3.94 in). Ensure strain relief to prevent the capillary from bending.

The maximum height difference depends on the density of the diaphragm seal fill fluid and the lowest absolute pressure that can ever occur at the diaphragm seal (empty container).

Cleaning instructions

Endress+Hauser provides flushing rings as an accessory to enable the process membrane to be cleaned without removing the transmitter from the process.

For more information: contact the Endress+Hauser sales office.

5.1.4 Installing pressure piping

- For recommendations for routing pressure piping, refer to DIN 19210 "Differential pressure piping for flow measurement devices" or the corresponding national or international standards
- When routing the pressure piping outdoors, ensure sufficient anti-freeze protection, e.g. by using pipe heat tracing
- Install the pressure piping with a monotonic gradient of at least 10%

5.1.5 Orientation

Diaphragm seal on one side or both sides with temperature isolator

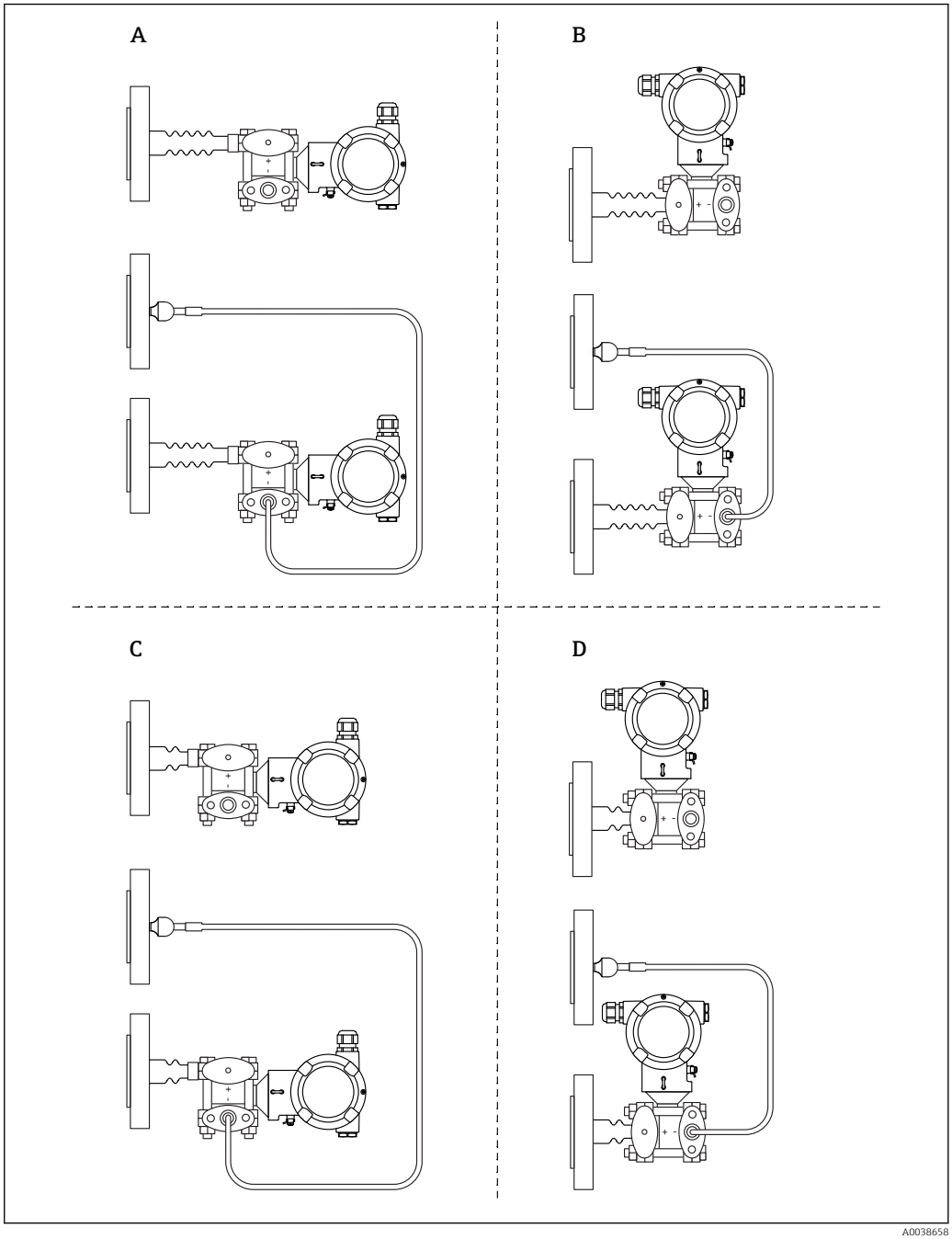

A Design HP side: Transmitter horizontal, temperature isolator long
B Design HP side: Transmitter vertical, temperature isolator long
C Design HP side: Transmitter horizontal, temperature isolator short
D Design HP side: Transmitter vertical, temperature isolator short

Diaphragm seal on one side or both sides with capillary

In vacuum applications, mount the pressure transmitter below the lower diaphragm seal.

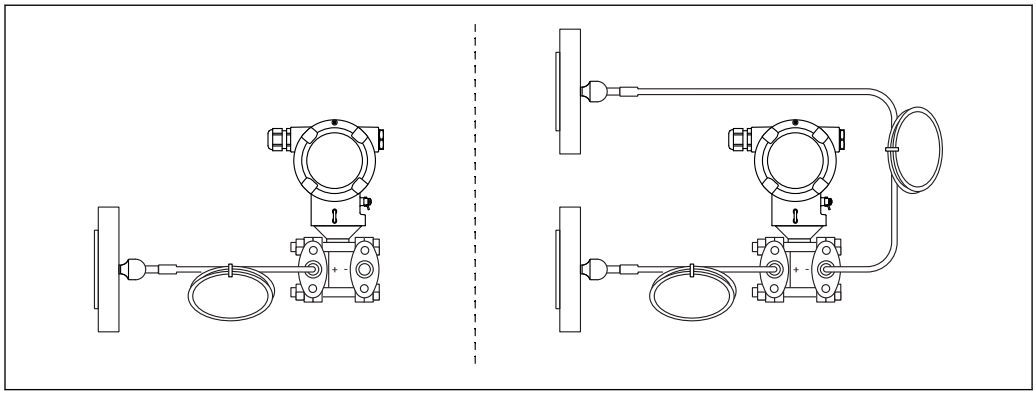

A0039528

Use "Sizing Diaphragm Seal" for the installation check.

5.2 Mounting the device

5.2.1 Level measurement

Level measurement in an open vessel, diaphragm seal on one side with temperature isolator

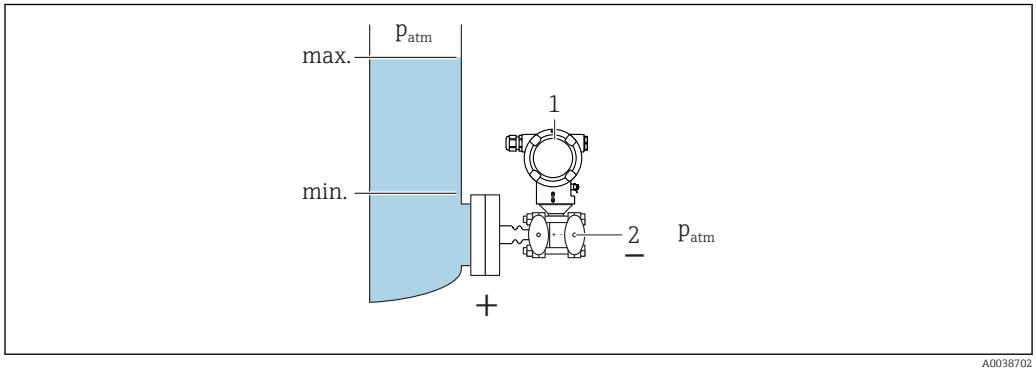

A0038702

1 Device
2 The negative side is open to atmospheric pressure

- Mount the device directly on the vessel
- The negative side is open to atmospheric pressure

Level measurement in a closed vessel, diaphragm seal on one side with temperature isolator

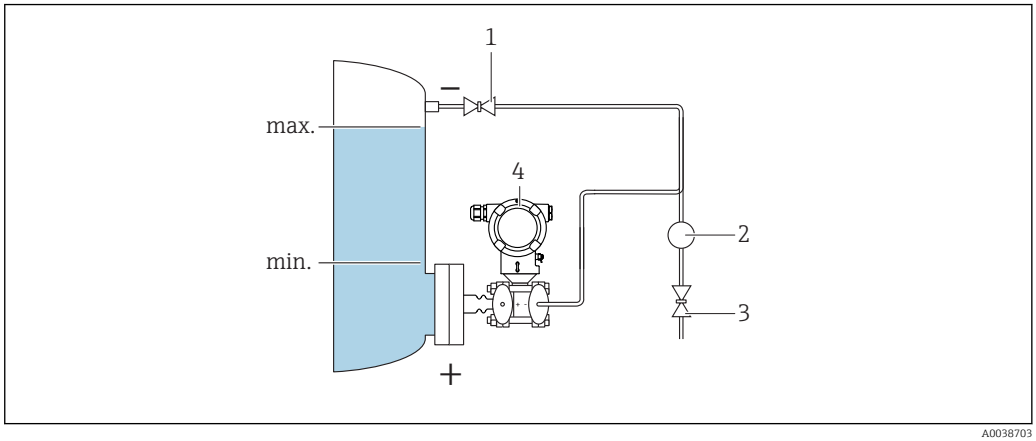

1 Shutoff valve
2 Separator
3 Drain valve
4 Device

- Mount the device directly on the vessel
- Always connect the piping on the negative side above the maximum level

Level measurement in a closed vessel, diaphragm seal on one side or both sides with capillary

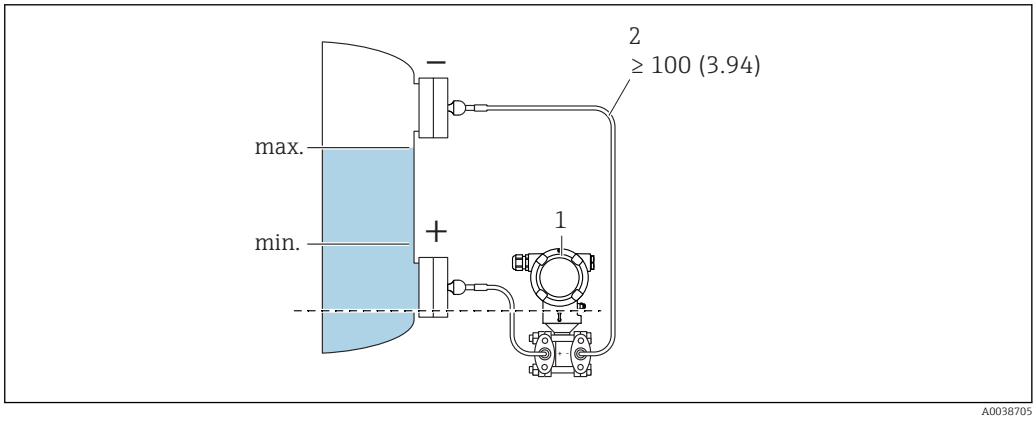

1 Device
2 Ensure strain relief to prevent the capillary from bending (bending radius ≥ 100 mm (3.94 in)).

Mount the device below the lower diaphragm seal

Level measurement is only guaranteed between the upper edge of the lower diaphragm seal and the lower edge of the upper diaphragm seal.

Level measurement in a closed vessel with superimposed vapor, diaphragm seal on one side with temperature isolator

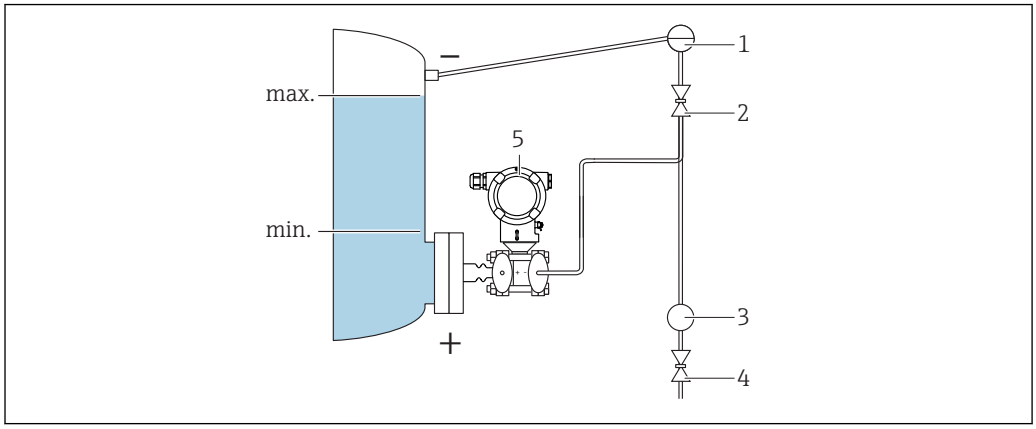

1 *Condensate trap*
2 *Shutoff valve*
3 *Separator*
4 *Drain valve*
5 *Device*

- Mount the device directly on the vessel
- Always connect the piping on the negative side above the maximum level
- The condensate trap ensures constant pressure on the negative side
- When measuring in media with solid parts (such as dirty liquids) installing separators and drain valves is useful for capturing and removing sediment

5.2.2 Differential pressure measurement

Differential pressure measurement in gases, vapors and liquids, diaphragm seal on one side or two sides with capillary

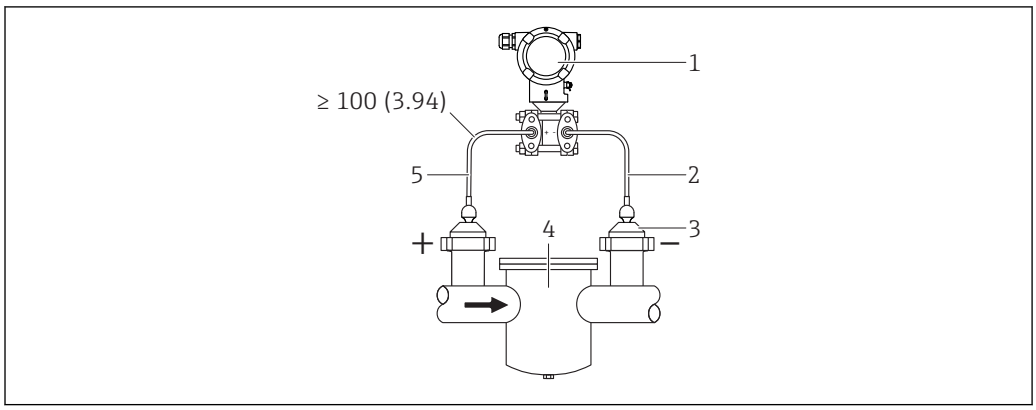

1 *Device*
2 *Capillary*
3 *Diaphragm seal*
4 *e.g. filter*
5 *Ensure strain relief to prevent the capillary from bending (bending radius ≥ 100 mm (3.94 in)).*

- Mount diaphragm seals with capillaries on pipes at the top or side
- In vacuum applications, mount the device below the measuring point

5.2.3 Oxygen applications (gaseous)

Oxygen and other gases can react explosively to oils, grease and plastics. The following precautions must be taken:

- All components of the system, such as measuring devices, must be cleaned in accordance with the national requirements.
- Depending on the materials used, a certain maximum temperature and a maximum pressure must not be exceeded with oxygen applications.

The cleaning of the device (not accessories) is offered as an optional service.

- p_{max}: PN of flange, max. 80 bar (1 200 psi)
- T_{max}: 60 °C (140 °F)

5.2.4 Thermal insulation when mounting with a temperature isolator

The device may only be insulated up to a certain height. The maximum permitted insulation height applies to an insulation material with a thermal conductivity ≤ 0.04 W/(m x K) and to the maximum permitted ambient temperature and process temperature. The data were determined under the application "quiescent air".

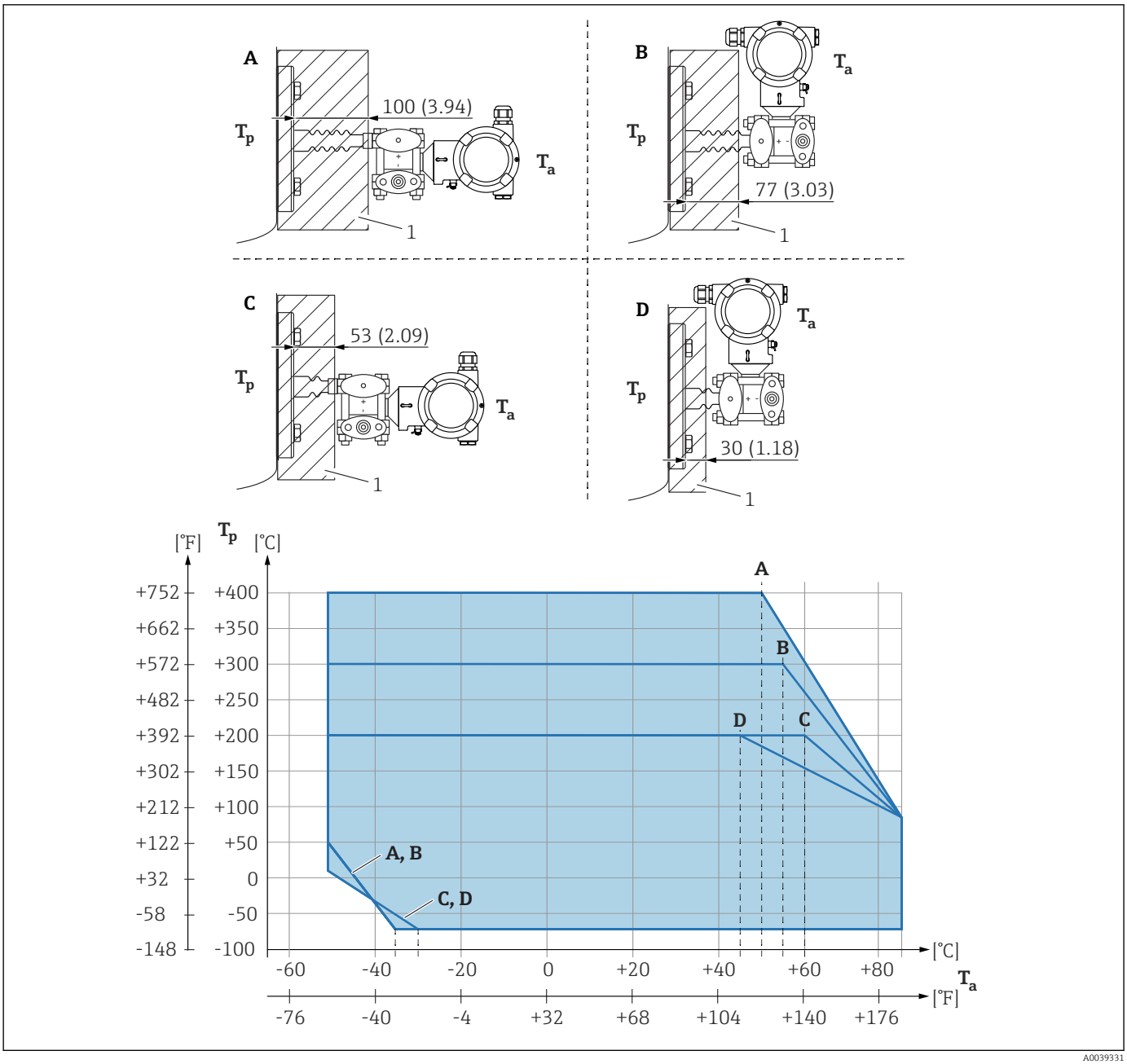

A0039331

1 Insulation material
A Transmitter horizontal, temperature isolator long
B Transmitter vertical, temperature isolator long
C Transmitter horizontal, temperature isolator short
D Transmitter vertical, temperature isolator short

Without insulation, the ambient temperature decreases by 5 K.

Item	T_a [1]	T_p [2]
A	50 °C (122 °F)	400 °C (752 °F)
	85 °C (185 °F)	85 °C (185 °F) [3]
	−50 °C (−58 °F)	50 °C (122 °F)
	−35 °C (−31 °F)	−70 °C (−94 °F)
B	55 °C (131 °F)	300 °C (572 °F) [3]
	85 °C (185 °F)	85 °C (185 °F)

Item	T_a [1]	T_p [2]
	−50 °C (−58 °F)	50 °C (122 °F)
	−35 °C (−31 °F)	−70 °C (−94 °F)
C	60 °C (140 °F)	200 °C (392 °F) [3]
	85 °C (185 °F)	85 °C (185 °F)
	−50 °C (−58 °F)	10 °C (50 °F)
	−30 °C (−22 °F)	−70 °C (−94 °F)
D	67 °C (153 °F)	200 °C (392 °F) [3]
	85 °C (185 °F)	85 °C (185 °F)
	−50 °C (−58 °F)	10 °C (50 °F)
	−30 °C (−22 °F)	−70 °C (−94 °F)

1) Maximum ambient temperature at transmitter
2) Maximum process temperature
3) Process temperature: max. +400 °C (+752 °F), depending on the diaphragm seal fill fluid used

5.2.5 Seal for flange mounting

NOTICE

Seal pressing against the process isolating diaphragm!
Incorrect measurement results!
► Ensure that the seal is not touching the process isolating diaphragm.

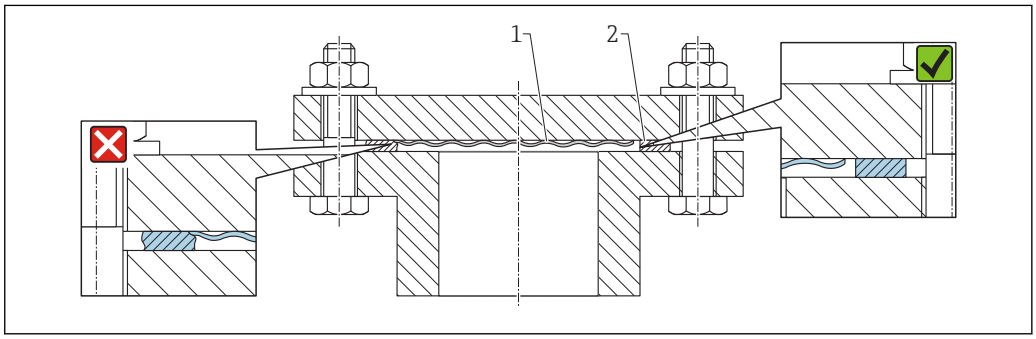

A0017743

1 Process isolating diaphragm
2 Seal

5.2.6 Wall and pipe mounting

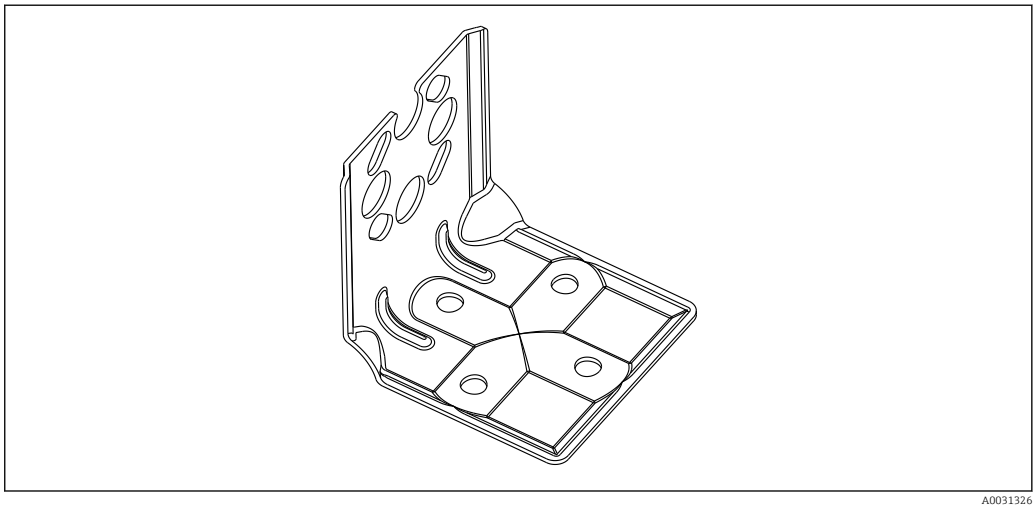

A0031326

- Bracket for wall and pipe mounting including retaining bracket for pipe mounting and two nuts
- The material of the screws used to secure the device depends on the order code

For technical data (e.g. materials, dimensions or order numbers), see the accessory document SD01553P.

5.2.7 Wall and pipe mounting with a manifold (optional)

- Mount the device on a shutoff device, e.g. manifold or shutoff valve
- Use the bracket provided. This make device removal easier.

For technical data (e.g. materials, dimensions or order numbers), see the accessory document SD01553P.

5.2.8 Mounting bracket for separate housing

The separate housing can be mounted on walls or pipes (for pipes with a diameter of 1 ¼" to 2") using the mounting bracket.

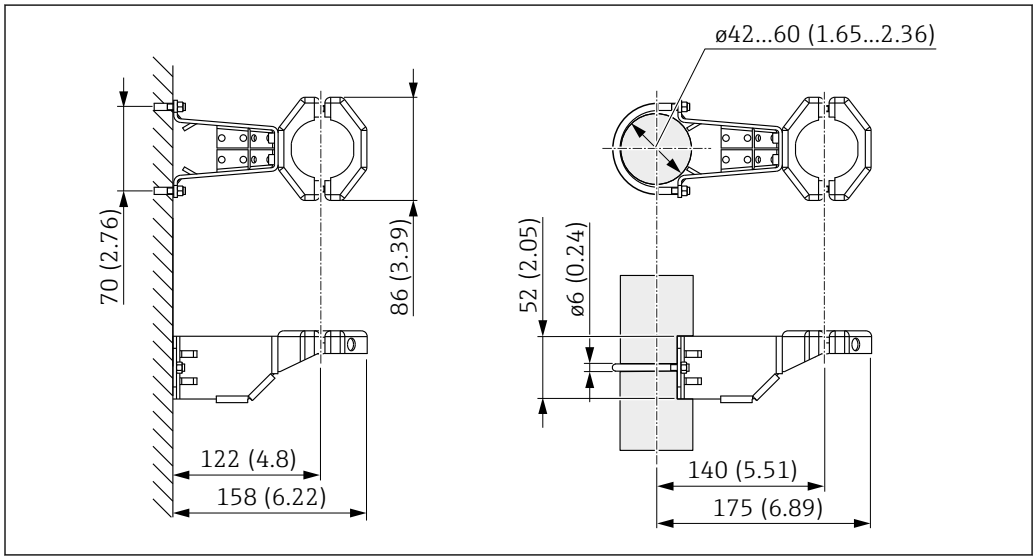

Unit of measurement mm (in)

Ordering information:
Can be ordered as a separate accessory, part number 71102216

The mounting bracket is included in the delivery if you order the device with a separate housing.

When mounting on a pipe, tighten the nuts on the bracket uniformly with a torque of at least 5 Nm (3.69 lbf ft).

5.2.9 Assembling and mounting the separate housing

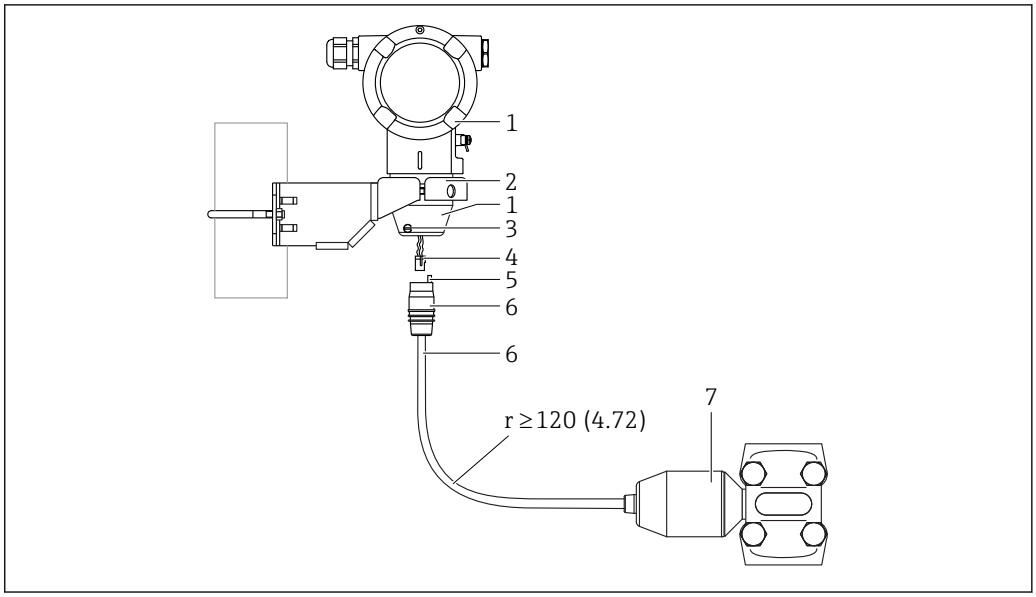

Unit of measurement mm (in)

1 *Housing mounted with housing adapter, included*
2 *Mounting bracket provided, suitable for pipe and wall mounting (for pipe diameters from 1 ¼" up to 2")*
3 *Locking screw*
4 *Plug*
5 *Pressure compensation*
6 *Cable with connection jack*
7 *In the separate housing version, the sensor is delivered with the process connection and cable already mounted.*

Assembly and mounting

1. Insert the connector (item 4) into the corresponding connection jack of the cable (item 6).
2. Insert the cable with the socket (item 6) into the housing adapter (item 1) to the end stop.
3. Tighten the locking screw (item 3).
4. Mount the housing on a wall or pipe with the mounting bracket (item 2). When mounting on a pipe, tighten the nuts on the bracket uniformly with a torque of at least 5 Nm (3.69 lbf ft). Mount the cable with a bending radius (r) ≥ 120 mm (4.72 in).

5.2.10 Turning the display module

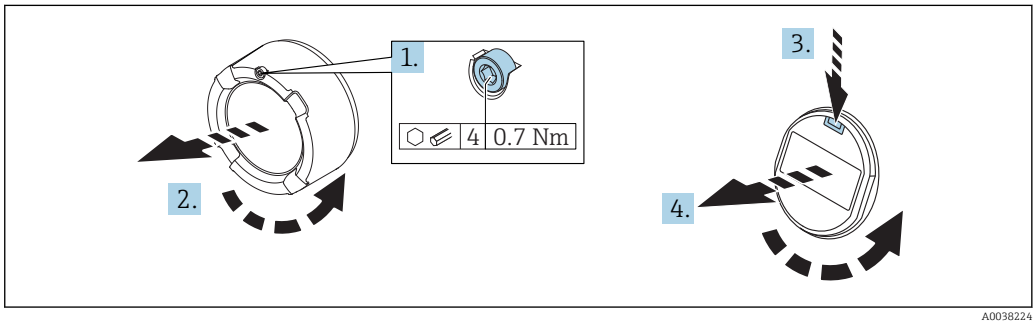

⚠ WARNING

Supply voltage switched on!
Risk of electric shock and/or explosion!
► Switch off the supply voltage before opening the device.

⚠ CAUTION

Dual compartment housing: when opening the terminal compartment cover, your fingers can get caught between the cover and pressure compensation filter.
► Open the cover slowly.

1. If fitted: release the screw of the cover lock for the electronics compartment cover using the Allen key.
2. Unscrew the electronics compartment cover from the transmitter housing and check the cover seal.
3. Press the release mechanism and remove the display module.
4. Turn the display module to the desired position: maximum 4 × 90 ° in each direction. Fit the display module on the electronics compartment in the desired position until it clicks into place. Screw the electronics compartment cover back onto the transmitter housing. If fitted: tighten the screw of the cover lock using the Allen key 0.7 Nm (0.52 lbf ft) ±0.2 Nm (0.15 lbf ft).

5.2.11 Closing the housing cover

NOTICE

Thread and housing cover damaged from dirt and fouling!
► Remove fouling (e.g. sand.) on the thread of the cover and housing.
► If you continue to encounter resistance when closing the cover, check the thread again for fouling.

Housing thread
The thread of the electronics and connection compartment is coated with lubricant varnish.
☒ Avoid additional lubrication.

5.2.12 Turning the housing

The housing can be rotated up to 380° by loosening the locking screw.

Your benefits
- Easy mounting due to optimum alignment of housing
- Easily accessible device operation
- Optimum readability of the onsite display (optional)

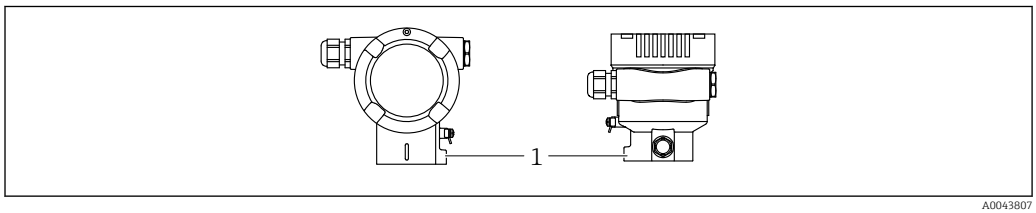

1 Locking screw

NOTICE

The housing cannot be unscrewed fully.

- ▶ Loosen the external locking screw by a maximum of 1.5 turns. If the screw is unscrewed too much or completely (beyond the screw anchor point), small parts (counter disk) can become loose and fall out.
- ▶ Tighten the securing screw (hex socket 4 mm (0.16 in)) with maximum 3.5 Nm (2.58 lbf ft) ± 0.3 Nm (0.22 lbf ft).

5.3 Post-mounting check

❑ Is the device undamaged (visual inspection)?

❑Are the measuring point identification and labeling correct (visual inspection)?

❑ Is the device protected against precipitation and direct sunlight?

❑ Are the securing screws and cover lock tightened securely?

❑ Does the measuring device meet the measuring point specifications?
For example:
- Process temperature
- Process pressure
- Ambient temperature
- Measuring range

6 Electrical connection

6.1 Connecting requirements

6.1.1 Potential equalization

The protective ground on the device must not be connected. If necessary, the potential matching line can be connected to the outer ground terminal of the transmitter before the device is connected.

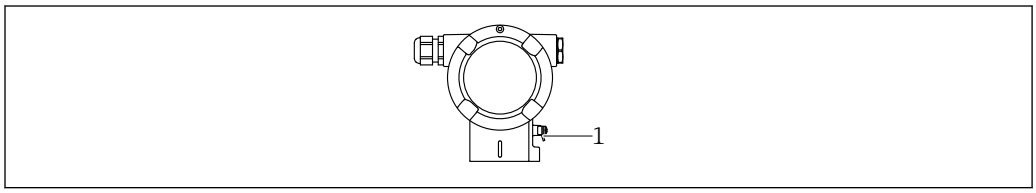

1 Ground terminal for connecting the potential matching line

⚠ WARNING

Explosion Hazard!

▶ Please refer to the separate documentation on applications in hazardous areas for the safety instructions.

For optimum electromagnetic compatibility:
- Keep the potential matching line as short as possible
- Maintain a cross-section of at least 2.5 mm² (14 AWG)

6.2 Connecting the device

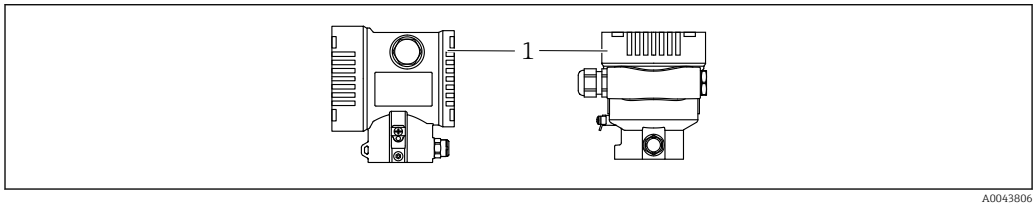

1 Connection compartment cover

Housing thread
The thread of the electronics and connection compartment is coated with lubricant varnish.
☒ Avoid additional lubrication.

6.2.1 Supply voltage

- Ex d, Ex e, non Ex: supply voltage: 10.5 to 35 V_{DC}
- Ex i: supply voltage: 10.5 to 30 V_{DC}
- Nominal current: 4 to 20 mA HART

The power unit must be tested to ensure it meets safety requirements (e.g. PELV, SELV, Class 2).

Depending on the supply voltage and the current consumption, background lighting is switched on or off. For the dependency, see the diagram:

Depending on the supply voltage and the current consumption, Bluetooth can optionally be switched on or off. For the dependency, see the diagram:

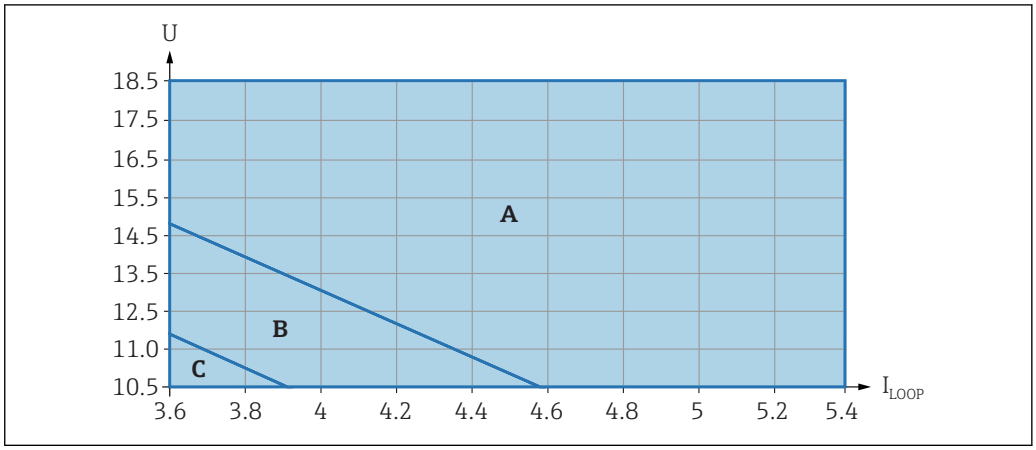

A Display lighting switched on, Bluetooth can be switched on optionally
B Display lighting switched off and Bluetooth can be switched on optionally
C Display lighting switched off and Bluetooth not active

6.2.2 Terminals

- Supply voltage and internal ground terminal: 0.5 to 2.5 mm² (20 to 14 AWG)
- External ground terminal: 0.5 to 4 mm² (20 to 12 AWG)

6.2.3 Cable specification

- Protective ground or grounding of the cable shield: rated cross-section > 1 mm² (17 AWG)
  Rated cross-section of 0.5 mm² (20 AWG) to 2.5 mm² (13 AWG)
- Cable outer diameter: Ø5 to 12 mm (0.2 to 0.47 in) depends on the cable gland used (see Technical Information)

6.2.4 4-20 mA HART

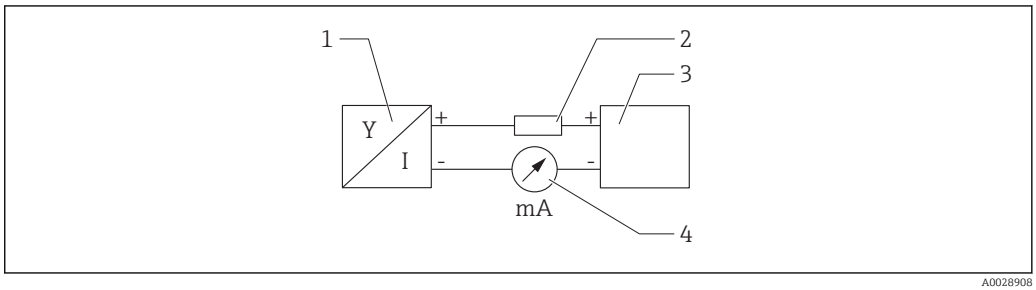

2 *Block diagram of HART connection*

1 Device with HART communication
2 HART communication resistor
3 Power supply
4 multimeter

The HART communication resistor of 250 Ω in the signal line is always necessary in the case of a low-impedance power supply.

Take the voltage drop into consideration:
Maximum 6 V for a 250 Ω communication resistor

6.2.5 Overvoltage protection

Devices without optional overvoltage protection

Equipment from Endress+Hauser fulfills the requirements of the product standard IEC / DIN EN 61326-1 (Table 2 Industrial Environment).

Depending on the type of port (DC power supply, input/output port) different testing levels according to IEC / DIN EN 61326-1 against transient overvoltages (Surge) are applied (IEC / DIN EN 61000-4-5 Surge):
Test level on DC power ports and input / output ports is 1000 V line to earth

Devices with optional overvoltage protection

- Spark-over voltage: min. 400 V DC
- Tested according to IEC / DIN EN 60079-14 sub chapter 12.3 (IEC / DIN EN 60060-1 chapter 7)
- Nominal discharge current: 10 kA

Overvoltage category

Overvoltage category II

6.2.6 Wiring

⚠ WARNING

Supply voltage might be connected!
Risk of electric shock and/or explosion!

- ▶ If the device is used in hazardous areas, make sure to comply with national standards and the specifications in the Safety Instructions (XAs). The specified cable gland must be used.
- ▶ The supply voltage must match the specifications on the nameplate.
- ▶ Switch off the supply voltage before connecting the device.
- ▶ If necessary, the potential matching line can be connected to the outer ground terminal of the transmitter before the device is connected.
- ▶ A suitable circuit breaker should be provided for the device in accordance with IEC/EN 61010.
- ▶ The cables must be adequately insulated, with due consideration given to the supply voltage and the overvoltage category.
- ▶ The connecting cables must offer adequate temperature stability, with due consideration given to the ambient temperature.
- ▶ Only operate the device with the covers closed.

Connect the device in the following order:

1. Release the cover lock (if provided).
2. Unscrew the cover.
3. Guide the cables into the cable glands or cable entries.
4. Connect the cable.
5. Tighten the cable glands or cable entries so that they are leak-tight. Counter-tighten the housing entry. Use a suitable tool with width across flats AF24/25
   8 Nm (5.9 lbf ft) for the M20 cable gland.
6. Screw the cover securely back onto the connection compartment.
7. If fitted: tighten the screw of the cover lock using the Allen key 0.7 Nm (0.52 lbf ft) ±0.2 Nm (0.15 lbf ft).

6.2.7 Terminal assignment

Dual compartment housing

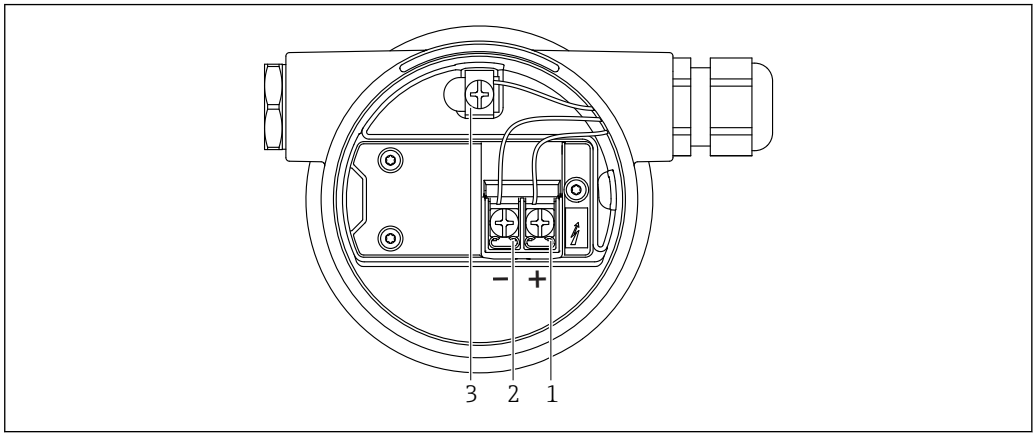

3 *Connection terminals and ground terminal in the connection compartment*

1 *Positive terminal*
2 *Negative terminal*
3 *Internal ground terminal*

6.2.8 Cable entries

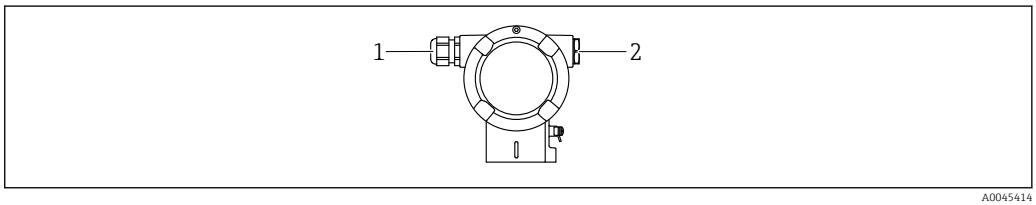

1 *Cable entry*
2 *Dummy plug*

The type of cable entry depends on the device version ordered.

Always route connecting cables downwards so that moisture cannot penetrate the connection compartment.

If necessary, create a drip loop or use a weather protection cover.

6.2.9 Available device plugs

In the case of devices with a plug, it is not necessary to open the housing for connection purposes.

Use the enclosed seals to prevent the penetration of moisture into the device.

Devices with M12 plug

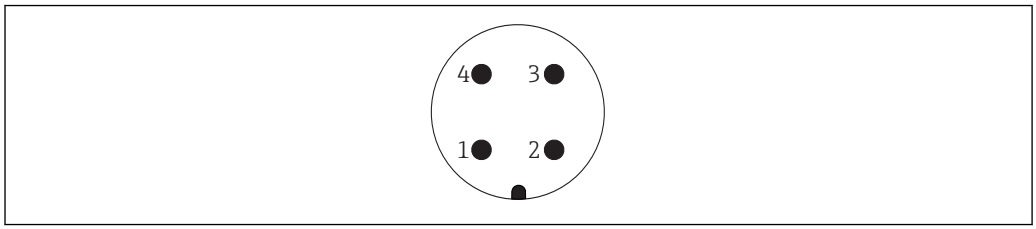

1 *Signal +*
2 *Not assigned*
3 *Signal –*
4 *Ground*

Devices with a Harting plug Han7D

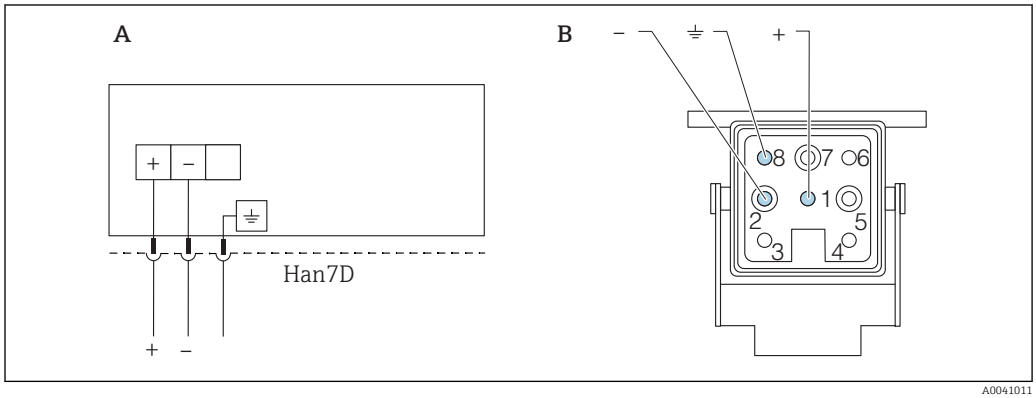

A Electrical connection for devices with Harting plug Han7D
B View of the plug-in connection on the device
- Brown
⏚ Green/yellow
+ Blue

6.3 Ensuring the degree of protection

6.3.1 Cable entries

- Gland M20, plastic, IP66/68 TYPE 4X/6P
- Gland M20, brass nickel plated, IP66/68 TYPE 4X/6P
- Gland M20, 316L, IP66/68 TYPE 4X/6P
- Thread M20, IP66/68 TYPE 4X/6P
- Thread G1/2, IP66/68 TYPE 4X/6P
  If the G1/2 thread is selected, the device is delivered with an M20 thread as standard and a G1/2 adapter is included with the delivery, along with the corresponding documentation
- Thread NPT1/2, IP66/68 TYPE 4X/6P
- Dummy plug transport protection: IP22, TYPE 2
- Plug HAN7D, 90 deg. IP65 NEMA Type 4X
- Plug M12
  When housing is closed and connecting cable is plugged in: IP66/67, NEMA Type 4X
  When housing is open or connecting cable is not plugged in: IP20, NEMA Type 1

NOTICE

Plug M12 and plug HAN7D: incorrect mounting can invalidate the IP protection class!

- The degree of protection only applies if the connecting cable used is plugged in and screwed tight.
- The degree of protection only applies if the connecting cable used is specified according to IP67, NEMA Type 4X.
- The IP protection classes are only maintained if the dummy cap is used or the cable is connected.

6.4 Post-connection check

After wiring the device, perform the following checks:

❑ Is the potential matching line connected?

❑ Is the terminal assignment correct?

❑ Are the cable glands and dummy plugs leak-tight?

❑ Are the fieldbus connectors properly secured?

❑ Are the covers screwed down correctly?

7 Operation options

7.1 Overview of operation options

- Operation via operating keys and DIP switches on the electronic insert
- Operation via optical operating keys on the device display (optional)
- Operation via Bluetooth® wireless technology (with optional Bluetooth device display) with Smartblue app or FieldXpert, DeviceCare
- Operation via operating tool (Endress+Hauser FieldCare/DeviceCare or AMS, PDM, etc.)
- Operation via handheld, Fieldcare, DeviceCare, AMS and PDM

7.2 Operating keys and DIP switches on the electronic insert

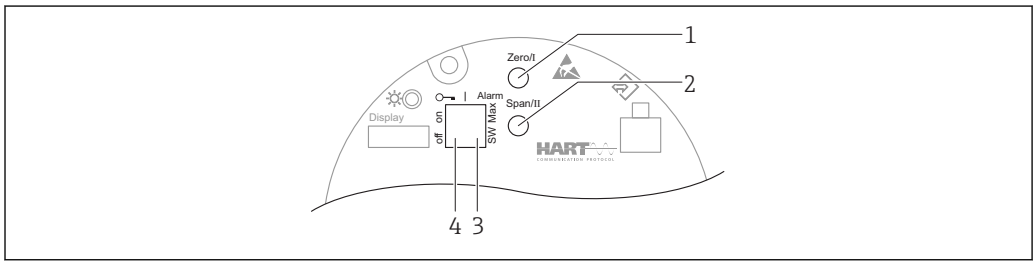

1 *Operating key for lower range value (Zero)*
2 *Operating key for upper range value (Span)*
3 *DIP switch for alarm current*
4 *DIP switch for locking and unlocking the device*

The setting of the DIP switches has priority over the settings made via other operation methods (e.g. FieldCare/DeviceCare).

7.3 Structure and function of the operating menu

The differences between the structure of the operating menus of the local display and the Endress+Hauser FieldCare or DeviceCare operating tools can be summarized as follows:

The local display is suitable for configuring simple applications.

More elaborate applications can be configured with the Endress+Hauser FieldCare or DeviceCare tools as well as Bluetooth and the SmartBlue app and the device display.

"Wizards" help the user to commission the various applications. The user is guided through the individual configuration steps.

7.3.1 User roles and related access authorization

The two user roles **Operator** and **Maintenance** (as-delivered state) have different write access to the parameters if a device-specific access code has been defined. This access code protects the device configuration from unauthorized access.

If an incorrect access code is entered, the user retains the **Operator** option user role.

7.4 Access to the operating menu via the local display

7.4.1 Device display (optional)

Functions:
- Display of measured values and fault and notice messages
- Background lighting, which switches from green to red in the event of an error
- The device display can be removed for easier operation

The device displays are available with the additional option of Bluetooth® wireless technology.

Depending on the supply voltage and the current consumption, background lighting is switched on or off.

Depending on the supply voltage and the current consumption, Bluetooth can optionally be switched on or off.

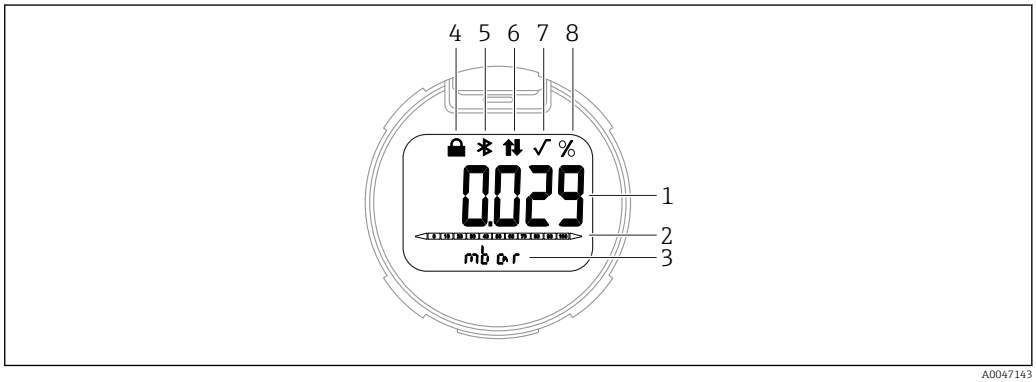

4 *Segment display*

1 Measured value
2 Bar graph proportional to the current output
3 Unit of measured value
4 Locked (symbol appears when the device is locked)
5 Bluetooth (symbol flashes if Bluetooth connection is active)
6 HART communication (symbol appears if HART communication is active)
7 Square root extraction (appears if a square root extraction of the measured value is output)
8 Measured value output in %

The following graphics are examples. The display depends on the display settings.

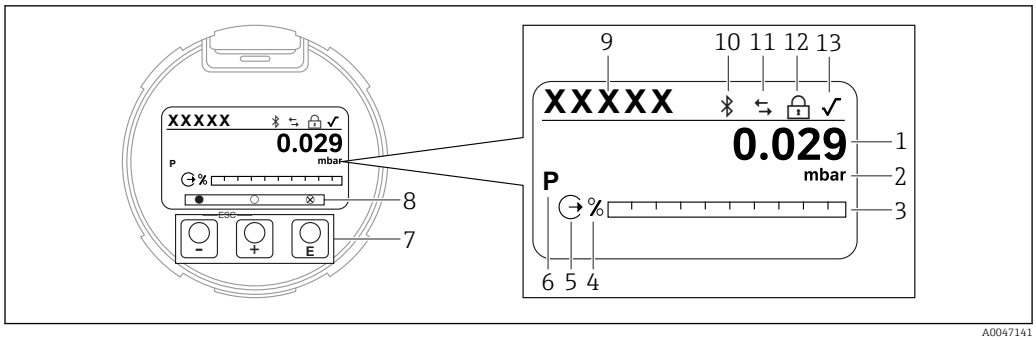

5 *Graphic display with optical operating keys.*

1 *Measured value*
2 *Unit of measured value*
3 *Bar graph proportional to the current output*
4 *Bar graph unit*
5 *Symbol for current output*
6 *Symbol for displayed measured value (e.g. p = pressure)*
7 *Optical operating keys*
8 *Symbols for key feedback. Different display symbols are possible: circle (not filled in) = key pressed briefly; circle (filled in) = key pressed for longer; circle (with X) = no operation possible due to Bluetooth connection*
9 *Device Tag*
10 *Bluetooth (symbol flashes if Bluetooth connection is active)*
11 *HART communication (symbol appears if HART communication is active)*
12 *Locked (symbol appears when the device is locked)*
13 *Symbol for square root extraction*

- Key ⊞
  - Navigate downwards in the picklist
  - Edit the numerical values or characters within a function
- Key ⊟
  - Navigate upwards in the picklist
  - Edit the numerical values or characters within a function
- Key Ⓔ
  - Confirm entry
  - Jump to the next item
  - Selection of a menu item and activation of edit mode
  - Unlock/lock the display operation
  - Press and hold the Ⓔ key to display a short description of the selected parameter (if available)
- ⊞ key and ⊟ key (ESC function)
  - Exit edit mode for a parameter without saving the changed value
  - Menu at a selection level: pressing the keys simultaneously takes the user back up a level in the menu
  - Press and hold the keys simultaneously to return to the upper level

7.4.2 Operation via Bluetooth® wireless technology (optional)

Prerequisite
- Device with Bluetooth display
- Smartphone or tablet with Endress+Hauser SmartBlue app or PC with DeviceCare from version 1.07.00 or FieldXpert SMT70

The connection has a range of up to 25 m (82 ft). The range can vary depending on environmental conditions such as attachments, walls or ceilings.

The operating keys on the display are locked as soon as the device is connected via Bluetooth.

SmartBlue app

1. Scan the QR code or enter "SmartBlue" in the search field of the App Store or Google Play.
   ↳

A0039186
2. Start the SmartBlue app.
3. Select device from livelist displayed.
4. Login:
   ↳ Enter the user name: admin
   Password: serial number of the device.
5. Change the password after logging in for the first time!

Prerequisites

System requirements
The SmartBlue app is available for download for use with a smartphone or tablet.
- iOS devices: iPhone 5S or higher from iOS11; iPad 5th generation or higher from iOS11; iPod Touch 6th generation or higher from iOS11
- Devices with Android: from Android 6.0 and *Bluetooth*® 4.0

Initial password
The serial number of the device serves as the initial password when the connection is established for the first time.

Note the following if the Bluetooth module is removed from one device and installed in another device: the password that is changed by the user is only saved in the Bluetooth module and not in the device itself.

7.5 Access to the operating menu via the operating tool

The structure of the operating menu in the operating tools is the same as for operation via the local display. The range of functions is different however.

7.5.1 Connecting the operating tool

Service interface

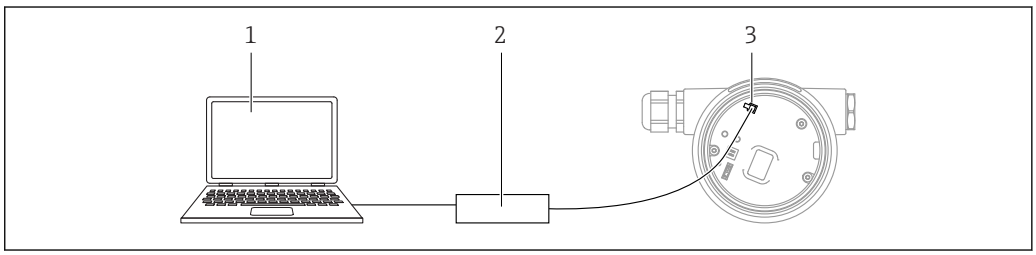

A0039148

1 Computer with FieldCare/DeviceCare operating tool
2 Commubox FXA291
3 Service interface (CDI) of the device (= Endress+Hauser Common Data Interface)

At least 22 mA is required to update (flash) the device firmware.

7.5.2 FieldCare

Function scope

FDT-based plant asset management tool from Endress+Hauser. FieldCare can configure all smart field devices in a system and helps you manage them. By using the status information, FieldCare is also a simple but effective way of checking their status and condition.

Access is via:
- CDI service interface
- HART communication

Typical functions:
- Parameterization of transmitters
- Loading and saving device data (upload/download)
- Documentation of the measuring point
- Visualization of the measured value memory (line recorder) and event logbook

For additional information about FieldCare, see Operating Instructions BA00027S and BA00059S

7.5.3 DeviceCare

Function scope

Tool for connecting and configuring Endress+Hauser field devices.

Together with the device type managers (DTMs) DeviceCare presents a convenient, comprehensive solution.

For details, see Innovation Brochure IN01047S

7.6 HistoROM

If the electronic insert is replaced, the stored data (except the event list) are transferred by unplugging the HistoROM module and plugging it into the new electronic insert. The device does not work without HistoROM.

The device serial number is saved in the HistoROM. The electronics serial number is saved in the electronics.

8 System integration

8.1 Overview of device description files

- Manufacturer ID: 17 (0x0011)
- Device type ID: 0x1131
- HART specification: 7.6
- DD files, information and files can be found at:
  - www.endress.com
  - www.fieldcommgroup.org

8.2 Measured variables via HART protocol

The following measured values are assigned to the device variables at the factory:

Device variable	Measured value
Primary variable (PV) [1]	Pressure [2]
Secondary variable (SV)	Sensor temperature
Tertiary variable (TV)	Electronics temperature
Quaternary variable (QV)	Sensor pressure [3]

1) The PV is always applied to the current output.
2) The pressure is the calculated signal after damping and position adjustment.
3) The sensor pressure is the raw sensor signal before damping and position adjustment.

The assignment of the measured values to the device variables can be changed in the following submenu:
Application → HART output → HART output

In a HART Multidrop loop, only one device may use the analog current value for signal transmission. For all other devices in the **"Loop current mode" parameter**, select the **Disable** option.

8.2.1 Device variables and measured values

The following codes are assigned to the device variables at the factory:

Device variable	Device variable code
Pressure	0
Scaled variable	1
Sensor temperature	2
Sensor pressure	3
Electronics temperature	4
Terminal current	5
Terminal voltage	6
Median of pressure signal	7
Noise of pressure signal	8
Percent of range	244

Device variable	Device variable code
Loop current	245
Not used	250

The device variables can be queried by a HART® master using HART® command 9 or 33.

8.2.2 System units

The following table describes the supported pressure measuring units.

Index number	Description	Hart unit code
0	mbar	8
1	bar	7
2	Pa	11
3	kPa	12
4	MPa	237
5	psi	6
6	torr	13
7	atm	14
8	mmH2O	4
9	mmH2O (4°C)	239
10	mH2O	240
11	mH2O (4°C)	240
10	ftH2O	3
11	inH2O	1
12	inH2O (4°C)	238
13	mmHg	5
14	inHg	2
15	gf/cm²	9
16	kgf/cm²	10

9 Commissioning

9.1 Preliminaries

The measuring range and the unit in which the measured value is transmitted correspond to the data on the nameplate.

⚠ WARNING

The settings of the current output are relevant for safety!
This situation can result in product overflow.
- The setting for the current output depends on the setting in the **Assign PV** parameter.
- After changing the PV assignment, check the settings for the range (LRV and URV) and reconfigure them if necessary.

⚠ WARNING

Process pressure above or below permitted maximum/minimum!
Risk of injury if parts burst! Warnings are displayed if the pressure is too high.
- If a pressure smaller than the minimum permitted pressure or greater than the maximum permitted pressure is present at the device, a message is output.
- Only use the device within the sensor range limits!

9.1.1 As-delivered state

If no customized settings were ordered:

- **Assign PV** parameter **Pressure** option
- Calibration values defined by defined sensor nominal value
- The alarm current is set to min. (3.6 mA), (only if no other option was selected when ordering)
- DIP switch to Off position
- If Bluetooth is ordered, then Bluetooth is switched on

9.2 Function check

Perform a function check before putting the measuring point into operation:

- "Post-installation check" checklist (see the "Installation" section)
- "Post-connection check" checklist (see the "Electrical connection" section)

9.3 Establishing a connection via FieldCare and DeviceCare

9.3.1 Via HART protocol

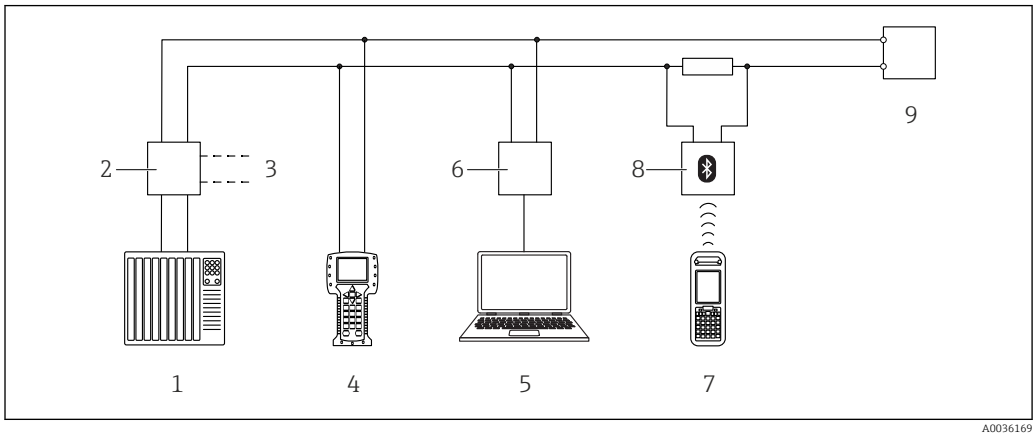

6 Options for remote operation via HART protocol

1 *PLC (programmable logic controller)*
2 *Transmitter power supply unit, e.g. RN221N (with communication resistor)*
3 *Connection for Commubox FXA195 and Field Communicator 375, 475*
4 *Field Communicator 475*
5 *Computer with operating tool (e.g. FieldCare/DeviceCare, AMS Device Manager, SIMATIC PDM)*
6 *Commubox FXA195 (USB)*
7 *Field Xpert SFX350/SFX370*
8 *VIATOR Bluetooth modem with connecting cable*
9 *Device*

9.3.2 FieldCare/DeviceCare via service interface (CDI)

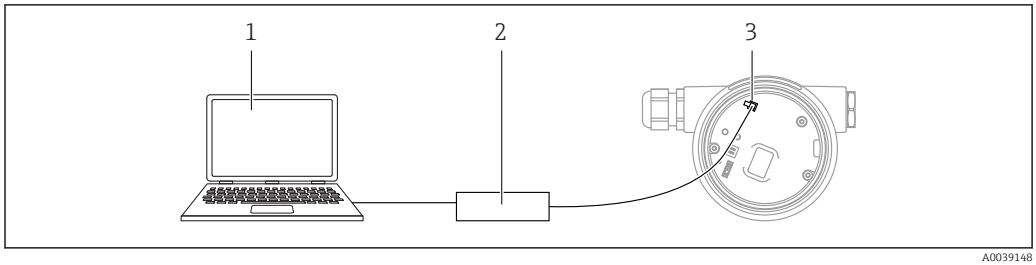

1 *Computer with FieldCare/DeviceCare operating tool*
2 *Commubox FXA291*
3 *Service interface (CDI) of the device (= Endress+Hauser Common Data Interface)*

At least 22 mA is required to update (flash) the device firmware.

9.4 Configuring the device address via software

See the **HART address** parameter.

Menu path: Application → HART output → Configuration → HART address

9.5 Setting the operating language

9.5.1 Local display

- Select the **Language** parameter in the main menu
  Press the E key
- Select the desired language with the + or − key
  Press the E key

Display operation - locking or unlocking

The E key must be pressed for at least 2 seconds in order to lock or unlock the optical keys. Display operation can be locked or unlocked in the dialog that appears.

Display operation locks automatically (except in the SIL wizard):
- After 1 minute on the main page if no key has been pressed
- After 10 minutes within the operating menu if no key has been pressed

9.6 Device configuration

9.6.1 Differential pressure measurement (e.g. flow measurement)

Before adjusting the device, the piping may need to be cleaned and filled with medium.

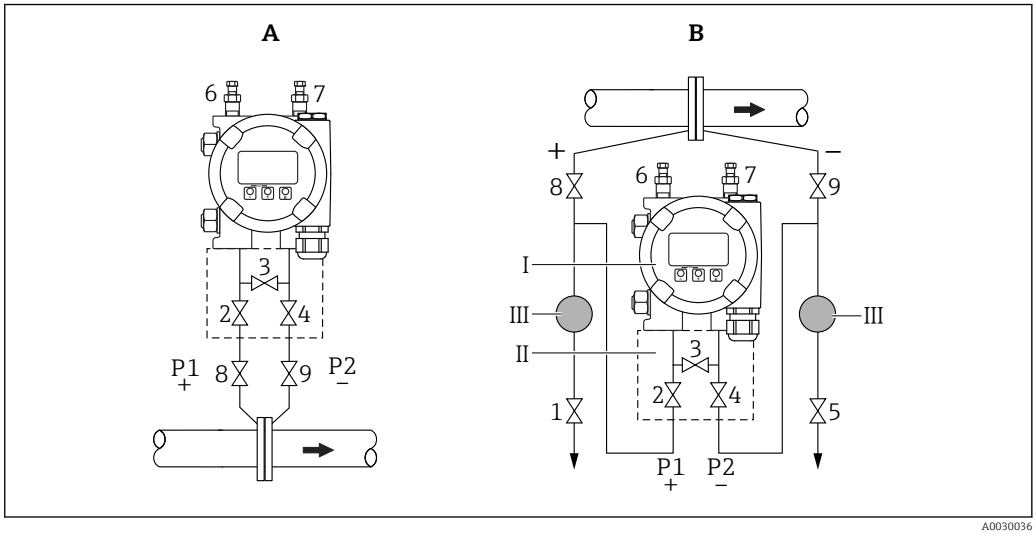

A Preferred installation for gases
B Preferred installation for liquids
I Device
II Three-valve manifold
III Separator
1, 5 Drain valves
2, 4 Inlet valves
3 Equalization valve
6, 7 Vent valves on device
8, 9 Shutoff valves

1. Close 3.
2. Fill the measuring system with medium.
   ↳ Open A, B, 2, 4. Fluid flows in.

3. Vent device.
   ↳ Liquids: Open 6 and 7 until the system (piping, valves and side flanges) is completely filled with medium.
   Gases: Open 6 and 7 until the system (piping, valves and side flanges) is completely filled with gas and free from condensation.
   Close 6 and 7.

Check the adjustment and perform again if necessary.

9.6.2 Level measurement

Open vessel

Before adjusting the device, the piping may need to be cleaned and filled with medium.

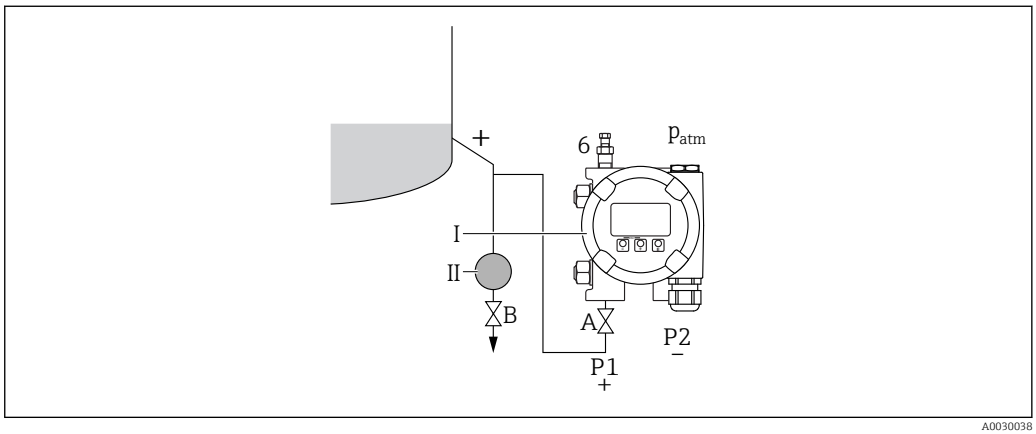

I Device
II Separator
6 Vent valve on device
A Shutoff valve
B Drain valve

1. Fill the vessel to above the lower tapping point.
2. Fill the measuring system with medium.
   ↳ Open A (shutoff valve).
3. Vent device.
   ↳ Open 6 until the system (piping, valve and side flange) is completely filled with medium.

Closed vessel

Before adjusting the device, the piping may need to be cleaned and filled with medium.

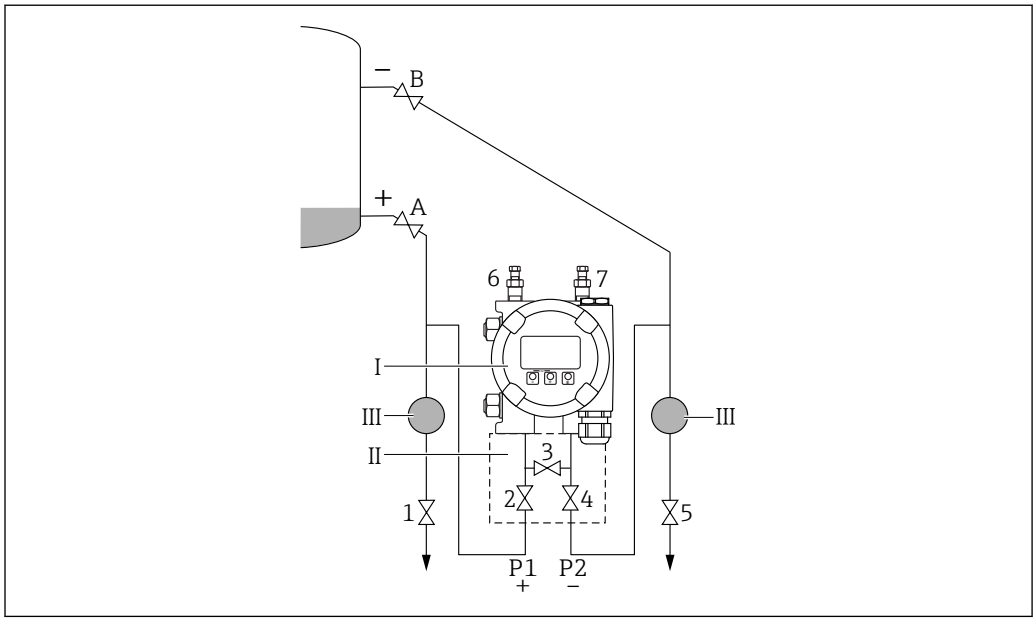

I Device
II Three-valve manifold
III Separator
1, 5 Drain valves
2, 4 Inlet valves
3 Equalization valve
6, 7 Vent valves on device
A, B Shutoff valves

1. Fill the vessel to above the lower tapping point.
2. Fill the measuring system with medium.
   ↳ Close 3 (separate high-pressure side and low-pressure side).
   Open A and B (shutoff valves).
3. Vent high-pressure side (empty low-pressure side if necessary).
   ↳ Open 2 and 4 (introduce fluid on high-pressure side).
   Open 6 until the system (piping, valve and side flange) is completely filled with medium.
   Open 7 until the system (piping, valve and side flange) is completely empty.

Closed vessel with superimposed vapor

Before adjusting the device, the piping may need to be cleaned and filled with medium.

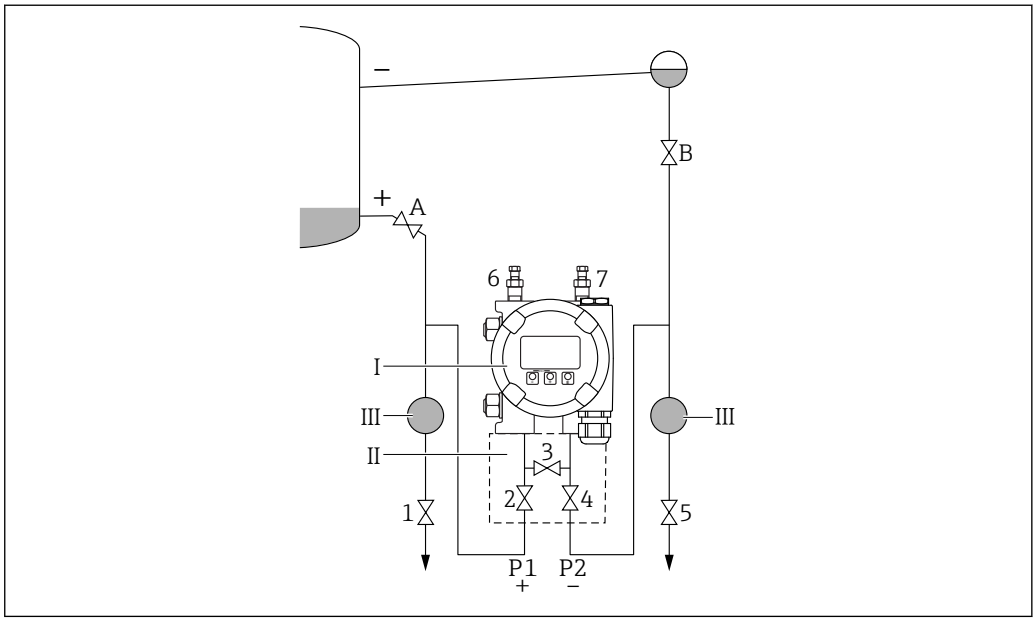

I Device
II Three-valve manifold
III Separator
1, 5 Drain valves
2, 4 Inlet valves
3 Equalization valve
6, 7 Vent valves on device
A, B Shutoff valves

1. Fill the vessel to above the lower tapping point.
2. Fill the measuring system with medium.
   ↳ Open A and B (shutoff valves).
   Fill the negative pressure piping to the height of the condensate trap.
3. Vent device.
   ↳ Open 2 and 4 (introduce fluid).
   Open 6 and 7 until the system (piping, valve and side flange) is completely filled with medium.

9.6.3 Commissioning with keys on the electronic insert

The following functions are possible via the keys on the electronic insert:
- Position adjustment (zero point correction)
  The orientation of the device may cause a pressure shift
  This pressure shift can be corrected by a position adjustment
- Setting lower range value and upper range value
  The pressure applied must be within the nominal pressure limits of the sensor (see the specifications on the nameplate)
- Resetting the device

Carrying out position adjustment

1. Device installed in desired position and no pressure applied.
2. Press the "Zero" and "Span" keys simultaneously for at least 3 s.
3. When the LED lights up briefly, the pressure present has been accepted for position adjustment.

Setting the lower range value (pressure or scaled variable)

1. Desired pressure for lower range value is present at device.
2. Press the "Zero" key for at least 3 s.
3. When the LED lights up briefly, the pressure present has been accepted for the lower range value.

Setting the upper range value (pressure or scaled variable)

1. Desired pressure for upper range value is present at device.
2. Press the "Span" key for at least 3 s.
3. When the LED lights up briefly, the pressure present has been accepted for the upper range value.
4. Does the LED on the electronic insert not light up?
   ↳ Applied pressure has not been accepted for upper range value.
   Wet calibration is not possible if the **Scaled variable** option has been selected in the **Assign PV** parameter and the **Table** option has been selected in the **Scaled variable transfer function** parameter.

Checking the settings (pressure or scaled variable)

1. Press the "Zero" key briefly in order to display the lower range value.
2. Press the "Span" key briefly in order to display the upper range value.
3. Press the "Zero" and "Span" keys simultaneously in order to display the calibration offset.

Resetting the device

► Press and hold the "Zero" and "Span" keys simultaneously for at least 12 s.

9.6.4 Commissioning with the Commissioning wizard

In FieldCare, DeviceCare [1], SmartBlue and on the display, the **Commissioning** wizard is available to guide the user through the initial commissioning steps. Commissioning is also possible via AMS or PDM.

1. Connect the device with FieldCare or DeviceCare.
2. Open the device in FieldCare or DeviceCare.
   ↳ The dashboard (homepage) of the device is displayed:
3. In the **Guidance** menu, click the **Commissioning** wizard to open the wizard.
4. Enter the appropriate value in each parameter or select the appropriate option. These values are written directly to the device.
5. Click "Next" to go to the next page.
6. Once all the pages have been completed, click "End" to close the **Commissioning** wizard.

If the **Commissioning** wizard is cancelled before all the necessary parameters have been configured, the device may be in an undefined state. In such situations, it is advisable to reset the device to the factory default settings.

1) DeviceCare is available for download at www.software-products.endress.com. You must register in the Endress+Hauser software portal to download the product.

Example: Outputting of the pressure value at the current output

Pressure and temperature units are converted automatically. Other units are not converted.

In the following example, the pressure value should be measured in a tank and output on the current output. The maximum pressure of 450 mbar (6.75 psi) corresponds to the 20 mA current. The 4 mA current corresponds to a pressure of 50 mbar (0.75 psi).

Prerequisites:
- Measured variable in direct proportion to the pressure
- Due to the orientation of the device, there may be pressure shifts in the measured value (when the vessel is empty or partly filled, the measured value is not zero)
  Perform a position adjustment if necessary
- In the **Assign PV** parameter, the **Pressure** option must be selected (factory setting)
  Display: In the **Guidance** menu **Commissioning** wizard, keep pressing the ⊞ key until you reach the **Assign PV** parameter. Press the Ⓔ key to confirm, select the **Pressure** option and press Ⓔ to confirm.

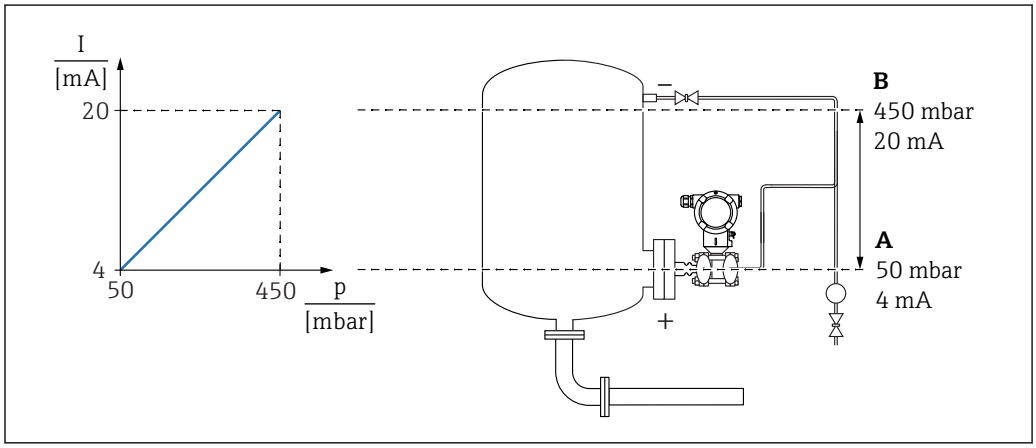

A Lower range value output
B Upper range value output

Adjustment:

1. Enter the pressure value for the 4 mA current via the **Lower range value output** parameter (50 mbar (0.75 psi)).
2. Enter the pressure value for the 20 mA current via the **Upper range value output** parameter (450 mbar (6.75 psi))

Result: The measuring range is set to 4 to 20 mA.

9.6.5 Commissioning without the commissioning wizard

Example: Commissioning a volume measurement in the tank

Pressure and temperature units are converted automatically. Other units are not converted.

In the following example, the volume in a tank should be measured in liters. The maximum volume of 1 000 l (264 gal) corresponds to a pressure of 450 mbar (6.75 psi).

The minimum volume of 0 liters corresponds to a pressure of 50 mbar (0.75 psi).

Prerequisites:
- Measured variable in direct proportion to the pressure
- Due to the orientation of the device, there may be pressure shifts in the measured value (when the vessel is empty or partly filled, the measured value is not zero)
  Perform position adjustment if necessary

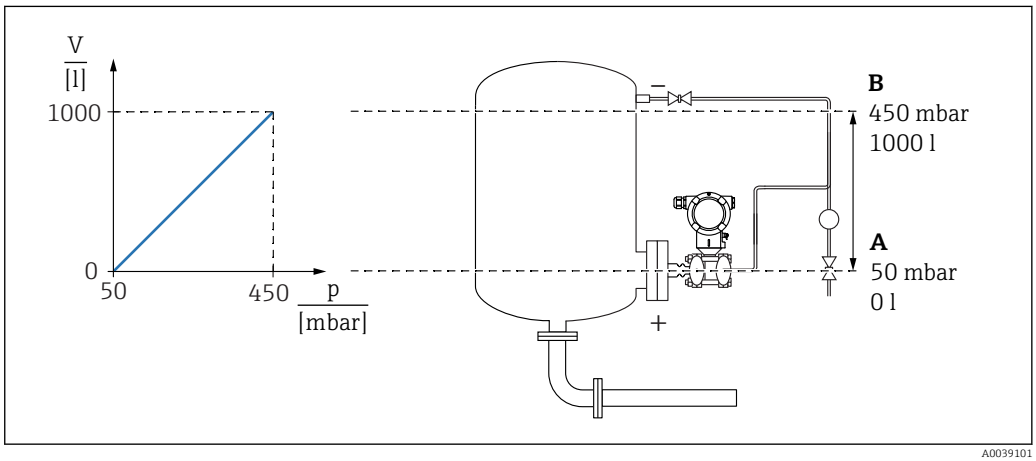

A "Pressure value 1" parameter and "Scaled variable value 1" parameter
B "Pressure value 2" parameter and "Scaled variable value 2" parameter

The pressure present is displayed in the operating tool on the same settings page in the "Pressure" field.

1. Enter the pressure value for the lower calibration point via the **Pressure value 1** parameter: 50 mbar (0.75 psi)
   ↳ Menu path: Application → Sensor → Scaled variable → Pressure value 1
2. Enter the volume value for the lower calibration point via the **Scaled variable value 1** parameter: 0 l (0 gal)
   ↳ Menu path: Application → Sensor → Scaled variable → Scaled variable value 1
3. Enter the pressure value for the upper calibration point via the **Pressure value 2** parameter: 450 mbar (6.75 psi)
   ↳ Menu path: Application → Sensor → Scaled variable → Pressure value 2
4. Enter the volume value for the upper calibration point via the **Scaled variable value 2** parameter: 1 000 l (264 gal)
   ↳ Menu path: Application → Sensor → Scaled variable → Scaled variable value 2

Result: The measuring range is set for 0 to 1 000 l (0 to 264 gal). Only the **Scaled variable value 1** parameter and **Scaled variable value 2** parameter are set with this setting. This setting has no effect on the current output.

Low flow cut off (square root extraction)

With the **Low cutoff** parameter, positive zero return can be configured in the lower measuring range.

Prerequisites:
- Measured variable with square root extraction in relation to pressure
- In the **Output current transfer function** parameter, set the **Square** option.
  Menu path: Application → Sensor → Sensor configuration → Output current transfer function
- Enter the switch-on point for the low flow cut off in the **Low cutoff** parameter (default 5 %)
  Menu path:Application → Sensor → Sensor configuration → Low cutoff

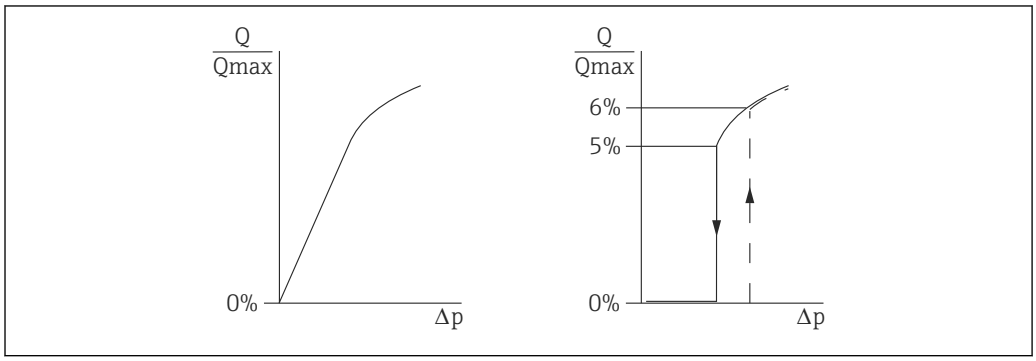

- The hysteresis between the switch-on point and the switch-off point is always 1 % of the maximum flow value
- If 0 % is entered for the switch-on point, low flow cut off is disabled

In the **Assign PV** parameter, the **Pressure** option must be selected (factory setting)
Menu path: Application → Sensor → Scaled variable → Assign PV
Alternative menu path: Application → HART output
The set unit is also output on the fieldbus.

9.7 "Simulation" submenu

With the **Simulation** submenu, the pressure, current and diagnostic events can be simulated.

Menu path: Diagnostics → Simulation

9.8 Protecting settings from unauthorized access

9.8.1 Hardware locking or unlocking

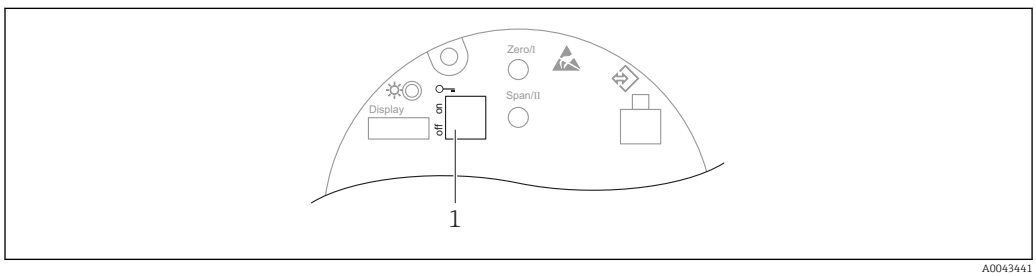

1 DIP switch for locking and unlocking the device

DIP switch 1 on the electronic insert is used to lock or unlock operation.

If operation is locked via the DIP switch, you can only unlock operation again via the DIP switch.

If operation is locked via the operating menu, you can only unlock operation again via the operating menu.

If operation is locked via the DIP switch, the key symbol appears on the local display.

Sealing the device

The housing cover is designed to be sealed for use in custody transfer.

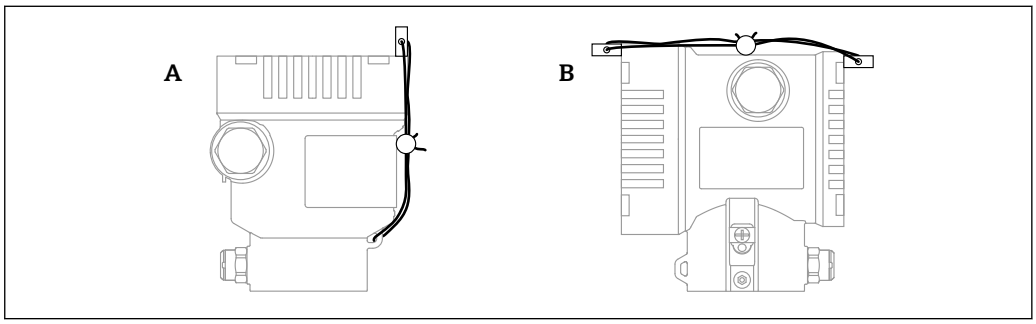

A Single compartment housing
B Dual compartment housing

9.8.2 Display operation - locking or unlocking

The E key must be pressed for at least 2 seconds in order to lock or unlock the optical keys. Display operation can be locked or unlocked in the dialog that appears.

Display operation locks automatically (except in the SIL wizard):
- After 1 minute on the main page if no key has been pressed
- After 10 minutes within the operating menu if no key has been pressed

9.8.3 Software locking or unlocking

If operation is locked by means of the DIP switch, you can only unlock operation again by means of the DIP switch.

Locking via password in display / FieldCare / DeviceCare / SmartBlue

Access to the device configuration can be locked by assigning a password. The user role is set to **Maintenance** option when the device is delivered to the customer. The device can be fully configured with the **Maintenance** option user role. Afterwards, access to the configuration can be locked by assigning a password. The lock sets the **Maintenance** option to the **Operator** option. The configuration can be accessed by entering the password.

The password is defined under:

System menu **User management** submenu

The user role can be changed from **Maintenance** option to **Operator** option under:

System → User management

Disabling the lock via the display / FieldCare / DeviceCare / SmartBlue

Once the password is entered, you can enable the configuration of the device as an **Operator** option by entering the password. The user role then changes to **Maintenance** option.

The password can be deleted if necessary in the **User management** submenu: System → User management

10 Operation

10.1 Reading off the device locking status

Displaying active write protection:
- In the **Locking status** parameter
  Menu path of local display: at the top operating level
  Menu path of operating tool: System → Device management
- In the operating tool (FieldCare/DeviceCare) in the DTM header

10.2 Reading off measured values

All the measured values can be read off using the **Measured values** submenu.

Navigation
"Application" menu → Measured values

10.3 Adapting the device to process conditions

The following are available for this purpose:
- Basic settings using the **Guidance** menu
- Advanced settings using the **Diagnostics** menu, **Application** menu and **System** menu

10.3.1 Sensor calibration [2)]

In the course of their life cycle, pressure sensors **can** deviate, or drift, [3)] from the original pressure characteristic curve. This deviation is caused by physical factors and can be corrected with a sensor calibration.

Absolute pressure sensors cannot be recalibrated.

Perform the sensor calibration. Adhere to the sequence indicated!

1. Apply the lower pressure value to the device.
2. Enter the value for the **Lower sensor trim** parameter. Application → Sensor → Sensor calibration → Lower sensor trim
   ↳ The value entered causes a parallel shift of the pressure characteristic in relation to the current calibration.
3. Apply the upper pressure value to the device.
4. Enter the value for the **Upper sensor trim** parameter. Application → Sensor → Sensor calibration → Upper sensor trim
   ↳ The value entered causes a change in the slope or a parallel shift of the current calibration curve.

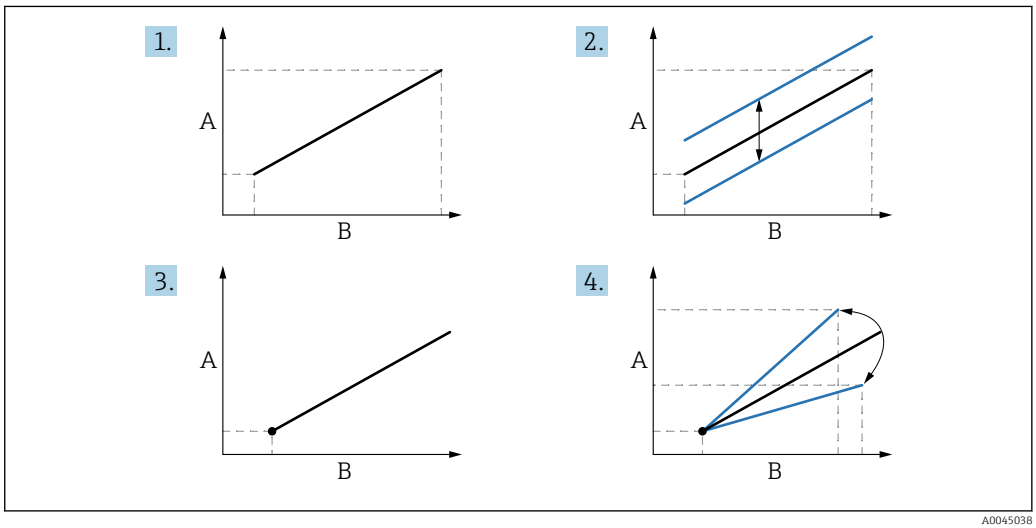

A Pressure display
B Pressure input

2) Not possible with display.
3) Deviations caused by physical factors are also known as "Sensor drift".

11 Diagnostics and troubleshooting

11.1 General troubleshooting

11.1.1 General errors

Device not responding
- Possible cause: Supply voltage does not match the specification on the nameplate
  Remedial action: Apply the correct voltage
- Possible cause: The polarity of the supply voltage is wrong
  Remedial action: Correct the polarity
- Possible cause: The cables do not contact the terminals properly
  Remedial action: Check the electrical contact between cables and correct if necessary
- Possible cause: Load resistance too high
  Remedial action: Increase the supply voltage to reach the minimum terminal voltage

No values visible on the display
- Possible cause: Graphic display is set too bright or too dark
  Remedial action: Increase or decrease the contrast with the **Contrast display** parameter
  Navigation path: System → Display → Contrast display
- Possible cause: The plug of the display cable is not connected correctly
  Remedial action: Connect the plug correctly
- Possible cause: Display is defective
  Remedial action: Replace the display

No background lighting on the graphic display
Possible cause: The electric current and voltage are not correct.
Remedial action: Increase the supply voltage and restart the device.

"Communication error" is indicated on the display when the device is started or the display is connected
- Possible cause: Electromagnetic interference influence
  Remedial action: Check grounding of the device
- Possible cause: Defective cable connection or display plug
  Remedial action: Replace the display

HART communication not working
- Possible cause: Communication resistor missing or incorrectly installed
  Remedial action: Install the communication resistor (250 Ω) correctly
- Possible cause: Commubox is connected incorrectly
  Remedial action: Connect Commubox correctly

Communication via CDI interface not working
Possible cause: Wrong setting of the COM port on the computer
Remedial action: Check the setting of the COM port on the computer and correct it if necessary

11.1.2 Error - SmartBlue operation with Bluetooth®

Device is not visible in the live list

- Possible cause: Supply voltage too low
  Remedial action: Increase the supply voltage
- Possible cause: No Bluetooth connection available
  Remedial action: Enable Bluetooth in the field device via display or software tool and/or in the smartphone/tablet
- Possible cause: Bluetooth signal outside range
  Remedial action: Reduce distance between field device and smartphone/tablet
  The connection has a range of up to 25 m (82 ft)
- Possible cause: Geopositioning is not enabled on Android devices or is not permitted for the SmartBlue app
  Remedial action: Enable/permit the geopositioning service on Android device for the SmartBlue app

Device appears in the live list but a connection cannot be established

- Possible cause: The device is already connected with another smartphone/tablet via Bluetooth
  Only one point-to-point connection is permitted
  Remedial action: Disconnect the smartphone/tablet from the device
- Possible cause: Incorrect user name and password
  Remedial action: The standard user name is "admin" and the password is the device serial number indicated on the device nameplate (only if the password was not changed by the user beforehand)
  If the password has been forgotten, contact Endress+Hauser Service (www.addresses.endress.com)

Connection via SmartBlue not possible

- Possible cause: Incorrect password entered
  Remedial action: Enter the correct password, paying attention to lower/upper case
- Possible cause: Forgotten password
  Remedial action: Contact Endress+Hauser Service (www.addresses.endress.com)

No communication with device via SmartBlue

- Possible cause: Supply voltage too low
  Remedial action: Increase the supply voltage
- Possible cause: No Bluetooth connection available
  Remedial action: Enable the Bluetooth function on the smartphone, tablet and device
- Possible cause: The device is already connected with another smartphone/tablet
  Remedial action: Disconnect the device from the other smartphone/tablet
- Ambient conditions (e.g. walls/tanks) disturbing the Bluetooth connection
  Remedial action: Establish direct line-of-sight connection
- Display does not have Bluetooth

Device cannot be operated via SmartBlue

Possible cause: **Operator** option has no authorization
Remedial action: Change to **Maintenance** option

11.1.3 Additional tests

If no clear cause of the error can be identified or the source of the problem can be both the device and the application, the following additional tests can be performed:

1. Check the digital pressure value (display, HART, etc.).
2. Check that the device concerned is functioning correctly. Replace the device if the digital value does not correspond to the expected pressure value.
3. Switch on simulation and check the current output. Replace the main electronics if the current output does not correspond to the simulated value.

11.1.4 Response of current output to errors

The response of the current output to errors is defined by the **Failure behavior current output** parameter.

Parameter overview with brief description

Parameter	Description	Selection / User entry
Failure behavior current output	Defines which current the output assumes in the case of an error. Min: < 3.6 mA Max: >21.5 mA	▪ Min. ▪ Max.
Failure current	Enter current output value in alarm condition.	21.5 to 23 mA

11.2 Diagnostic information on local display

11.2.1 Diagnostic message

Measured value display and diagnostic message in alarm condition

Faults detected by the device's self-monitoring system are displayed as a diagnostic message in alternation with the unit.

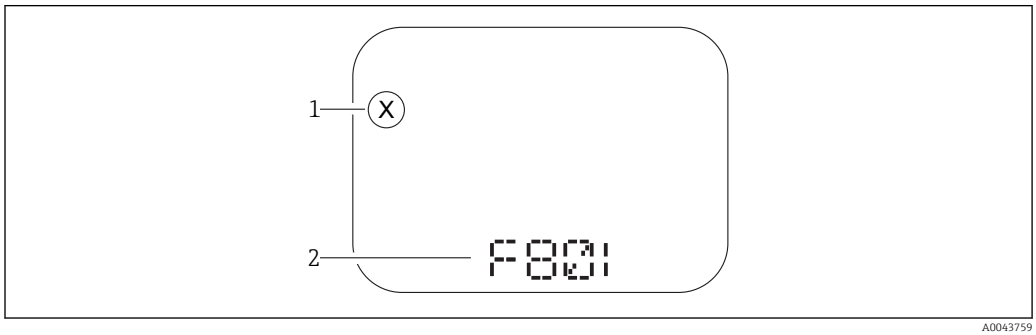

1 Status signal
2 Status symbol with diagnostic event

Faults detected by the device's self-monitoring system are displayed as a diagnostic message in alternation with the measured value display.

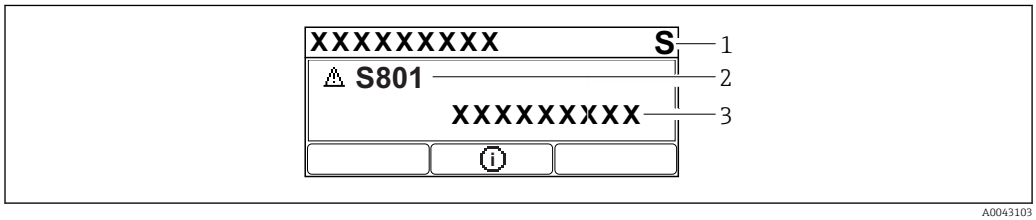

1 Status signal
2 Status symbol with diagnostic event
3 Event text

Status signals

F

"Failure (F)" option
A device error has occurred. The measured value is no longer valid.

C

"Function check (C)" option
The device is in the service mode (e.g. during a simulation).

S

"Out of specification (S)" option
The device is being operated:
- Outside of its technical specifications (e.g. during startup or a cleaning)
- Outside of the configuration performed by the user (e.g. level outside configured span)

M

"Maintenance required (M)" option
Maintenance required. The measured value remains valid.

Diagnostic event and event text

The fault can be identified by means of the diagnostic event. The event text helps you by providing information about the fault. In addition, the corresponding status symbol is displayed in front of the diagnostic event.

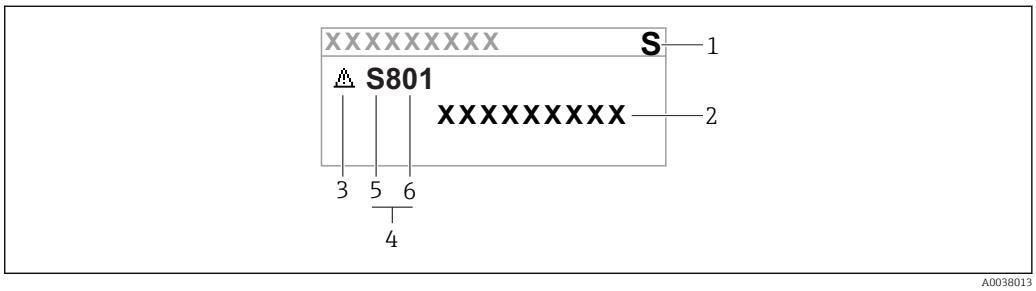

1 Status signal
2 Event text
3 Status symbol
4 Diagnostic event
5 Status signal
6 Event number

If two or more diagnostic events occur simultaneously, only the diagnostic message with the highest priority is shown.

"Active diagnostics" parameter

Key ⊞

Opens the message about the remedial measures.

Key ⊟

Acknowledge warnings.

Key Ⓔ

Back to operating menu.

11.3 Diagnostic event in the operating tool

If a diagnostic event has occurred in the device, the status signal appears in the top left status area of the operating tool together with the corresponding symbol for the event level according to NAMUR NE 107:

- Failure (F)
- Function check (C)
- Out of specification (S)
- Maintenance required (M)

Click the status signal to see the detailed status signal.

The diagnostic events and remedial measures can be printed out in the **Diagnostic list** submenu.

11.4 Adapting the diagnostic information

The event level can be configured:

Menu path: Diagnostics → Diagnostic settings → Configuration

11.5 Queued diagnostic messages

The display alternates between the queued diagnostic messages and the measured value.

Queued diagnostic messages can also be displayed in the **Active diagnostics** parameter.

Menu path: Diagnostics → Active diagnostics

11.6 Diagnostic list

All the diagnostic messages that are currently queued can be displayed in the **Diagnostic list** submenu.

Navigation path
Diagnostics → Diagnostic list

11.6.1 List of diagnostic events

Diagnostic number	Short text	Remedy instructions	Status signal [from the factory]	Diagnostic behavior [from the factory]
Diagnostic of sensor				
062	Sensor connection faulty	Check sensor connection	F	Alarm
081	Sensor initialization faulty	1. Restart device 2. Contact service	F	Alarm
100	Sensor error	1. Restart the device 2. Contact Endress+Hauser Service	F	Alarm
101	Sensor temperature	1. Check process temperature 2. Check ambient temperature	F	Alarm
102	Sensor incompatible error	1. Restart device 2. Contact service	F	Alarm
Diagnostic of electronic				
242	Firmware incompatible	1. Check software 2. Flash or change main electronic module	F	Alarm
252	Module incompatible	1. Check if correct electronic modul is plugged 2. Replace electronic module	F	Alarm
263	Incompatibility detected	Check electronic module type	M	Warning
270	Main electronics defective	Replace main electronics	F	Alarm
272	Main electronics faulty	1. Restart device 2. Contact service	F	Alarm
273	Main electronics defective	1. Transfer data or reset device 2. Contact service	F	Alarm
282	Data storage inconsistent	1. Restart device 2. Contact service	F	Alarm
283	Memory content inconsistent	1. Transfer data or reset device 2. Contact service	F	Alarm
287	Memory content inconsistent	1. Restart device 2. Contact service	M	Warning
311	Electronic failure	Maintenance required! 1. Do not perform reset 2. Contact service	M	Warning
Diagnostic of configuration				
410	Data transfer failed	1. Check connection 2. Retry data transfer	F	Alarm
412	Processing download	Download active, please wait	C	Warning
431	Trim required	Carry out trim	C	Warning
435	Linearization faulty	Check linearization table	F	Alarm
437	Configuration incompatible	1. Restart device 2. Contact service	F	Alarm
438	Dataset different	1. Check data set file 2. Check device configuration 3. Up- and download new configuration	M	Warning
441	Current output out of range	1. Check process 2. Check current output settings	S	Warning

Diagnostic number	Short text	Remedy instructions	Status signal [from the factory]	Diagnostic behavior [from the factory]
484	Failure mode simulation active	Deactivate simulation	C	Alarm
485	Process variable simulation active	Deactivate simulation	C	Warning
491	Current output simulation active	Deactivate simulation	C	Warning
495	Diagnostic event simulation active	Deactivate simulation	C	Warning
500	Process alert pressure	1. Check process pressure 2. Check configuration of process alert	S	Warning [1]
501	Process alert scaled variable	1. Check process conditions 2. Check scaled variable configuration	S	Warning [1]
502	Process alert temperature	1. Check process temperature 2. Check configuration of process alert	S	Warning [1]
503	Zero adjustment	1. Check measuring range 2. Check position adjustment	M	Warning
Diagnostic of process				
801	Supply voltage too low	Increase supply voltage	F	Alarm
802	Supply voltage too high	Decrease supply voltage	S	Warning
805	Loop current faulty	1. Check wiring 2. Replace electronics	F	Alarm
806	Loop diagnostics	1. Check supply voltage 2. Check wiring and terminals	M	Warning [1]
807	No Baseline due to insuf. volt. at 20 mA	Increase supply voltage	M	Warning
822	Sensor temperature out of range	1. Check process temperature 2. Check ambient temperature	S	Warning [1]
825	Operating temperature	1. Check ambient temperature 2. Check process temperature	S	Warning
841	Operating range	1. Check the process pressure 2. Check the sensor range	S	Warning [1]
900	High signal noise detected	1. Check impulse line 2. Check valve position 3. Check process	M	Warning [1]
901	Low signal noise detected	1. Check impulse line 2. Check valve position 3. Check process	M	Warning [1]
902	Min signal noise detected	1. Check impulse line 2. Check valve position 3. Check process	M	Warning [1]
906	Out of range signal detected	1. Process Information. No action 2. Rebuild baseline 3. Adapt signal range thresholds	S	Warning [1]

1) Diagnostic behavior can be changed.

11.7 Event logbook

11.7.1 Event history

The **Event list** submenu provides a chronological overview of the event messages that have occurred [4].

Navigation path
Diagnostics → Event logbook

A maximum of 100 event messages can be displayed in chronological order.

The event history includes entries for:
- Diagnostic events
- Information events

In addition to the operating time when the event occurred, each event is also assigned a symbol that indicates whether the event has occurred or is finished:
- Diagnostic event
  - ⊖: Occurrence of the event
  - ⊕: End of the event
- Information event
  ⊖: Occurrence of the event

11.7.2 Filtering the event logbook

Filters can be used to determine which category of event messages is displayed in the **Event list** submenu.

Navigation path
Diagnostics → Event logbook

Filter categories
- All
- Failure (F)
- Function check (C)
- Out of specification (S)
- Maintenance required (M)
- Information

11.7.3 Overview of information events

Info number	Info name
I1000	--------(Device ok)
I1079	Sensor changed
I1089	Power on
I1090	Configuration reset
I1091	Configuration changed
I11074	Device verification active
I1110	Write protection switch changed
I11104	Loop diagnostics
I1151	History reset
I1154	Reset terminal voltage min/max

4) If operating via FieldCare, the event list can be displayed with the "Event List/HistoROM" function in FieldCare.

Info number	Info name
I1155	Reset electronics temperature
I1157	Memory error event list
I1256	Display: access status changed
I1264	Safety sequence aborted
I1335	Firmware changed
I1397	Fieldbus: access status changed
I1398	CDI: access status changed
I1440	Main electronic module changed
I1444	Device verification passed
I1445	Device verification failed
I1461	Sensor verification failed
I1512	Download started
I1513	Download finished
I1514	Upload started
I1515	Upload finished
I1551	Assignment error fixed
I1552	Failed: Main electronic verification
I1554	Safety sequence started
I1555	Safety sequence confirmed
I1556	Safety mode off
I1956	Reset

11.7.4 Overview of information events

Info number	Info name
I1000	--------(Device ok)
I1079	Sensor changed
I1089	Power on
I1090	Configuration reset
I1091	Configuration changed
I11074	Device verification active
I1110	Write protection switch changed
I11104	Loop diagnostics
I1151	History reset
I1154	Reset terminal voltage min/max
I1155	Reset electronics temperature
I1157	Memory error event list
I1256	Display: access status changed
I1264	Safety sequence aborted
I1335	Firmware changed
I1397	Fieldbus: access status changed
I1398	CDI: access status changed
I1440	Main electronic module changed

Info number	Info name
I1444	Device verification passed
I1445	Device verification failed
I1461	Sensor verification failed
I1512	Download started
I1513	Download finished
I1514	Upload started
I1515	Upload finished
I1551	Assignment error fixed
I1552	Failed: Main electronic verification
I1554	Safety sequence started
I1555	Safety sequence confirmed
I1556	Safety mode off
I1956	Reset

11.8 Resetting the device

11.8.1 Resetting the device via the operating software or display

The device can be reset with the **Device reset** parameter.

Menu path: System → Device management

11.8.2 Resetting the device via keys on the electronic insert

Press the "Zero" and "Span" keys simultaneously for at least 12 seconds.

11.9 Device information

All the device information is contained in the **Information** submenu.

Menu path: System → Information

For details see the "Description of device parameters" document.

11.10 Firmware history

The firmware version can explicitly be ordered via the product structure. This makes it possible to ensure the compatibility of the firmware version with an existing or planned system integration.

11.10.1 Version 01.00.zz

Original software

12 Maintenance

12.1 Maintenance tasks

This chapter describes the maintenance of physical device components.

12.1.1 Flushing rings

The use of flushing rings allows the process membrane to be cleaned without removing the device from the process.

For more information: contact the Endress+Hauser sales office.

12.1.2 Exterior cleaning

Notes on cleaning

- The cleaning agents used should not corrode the surfaces and the seals
- Mechanical damage to the process membrane, e.g. due to sharp objects, must be avoided
- Observe the degree of protection of the device

13 Repair

13.1 General notes

13.1.1 Repair concept

Under the Endress+Hauser repair concept, devices have a modular design and repairs can be carried out by Endress+Hauser Service or by properly trained customers.

Spare parts are grouped into logical kits with the associated replacement instructions.

For more information on service and spare parts contact Endress+Hauser Service.

13.1.2 Repairs to Ex- or SIL-certified devices

⚠ WARNING

Incorrect repair can affect electrical safety!
Explosion Hazard!

- ▶ Only specialist personnel or Endress+Hauser Service can carry out repairs to Ex certified devices.
- ▶ Observe the relevant standards and national regulations as well as Safety Instructions (XA) and certificates.
- ▶ Only use original Endress+Hauser spare parts.
- ▶ When ordering the spare part, pay attention to the device designation on the nameplate. Only replace parts with identical parts.
- ▶ Carry out repairs according to the instructions. Following a repair, the individual testing specified for the device must be performed.
- ▶ A certified device may only be converted into another certified version by Endress +Hauser Service.
- ▶ All repairs and modifications must be documented.

13.2 Spare parts

- Some replaceable device components are identified by a spare part nameplate. This contains information about the spare part.
- All the spare parts for the measuring device, along with the order code, are listed in the *Device Viewer* (www.endress.com/deviceviewer) and can be ordered. If available, users can also download the associated Installation Instructions.

Device serial number:
- Located on the device and spare part nameplate.
- Can be read out via the device software.

13.3 Replacement

⚠ CAUTION

Data upload/download is not permitted if the device is used for safety-related applications.

- ▶ After an entire device or an electronics module has been replaced, the parameters can be downloaded to the device again via the communication interface. For this, the data must have been uploaded to the PC beforehand using the "FieldCare/DeviceCare" software.

13.3.1 HistoROM

It is not necessary to perform a new device calibration after replacing the display or transmitter electronics. The parameters are saved in the HistoROM.

After replacing the transmitter electronics, remove the HistoROM and insert it into the new replacement part.

13.4 Return

The device must be returned in the event of a factory calibration, or if the wrong device has been ordered or delivered.

As an ISO-certified company and also due to legal regulations, Endress+Hauser is obliged to follow certain procedures when handling any returned products that have been in contact with medium. To ensure swift, safe and professional device returns, please read the return procedures and conditions on the Endress+Hauser website www.services.endress.com/return-material.

- Select country.
  - The website of the responsible sales office opens with all the relevant information relating to returns.

1. If the desired country is not listed:
   Click on the "Choose your location" link.
   - An overview of Endress+Hauser sales offices and representatives opens.
2. Contact the Endress+Hauser sales organization responsible for your area.

13.5 Disposal

If required by the Directive 2012/19/EU on waste electrical and electronic equipment (WEEE), the product is marked with the depicted symbol in order to minimize the disposal of WEEE as unsorted municipal waste. Do not dispose of products bearing this marking as unsorted municipal waste. Instead, return them to Endress+Hauser for disposal under the applicable conditions.

14 Accessories

14.1 Device-specific accessories

14.1.1 Mechanical accessories

- Mounting bracket for housing
- Flushing rings
- Weather protection covers

For technical data (e.g. materials, dimensions or order numbers), see the accessory document SD01553P.

14.1.2 Plug connectors

- Plug connector M12 90 deg, IP67 5m cable, union nut, Cu Sn/Ni
- Plug connector M12, IP67 union nut, Cu Sn/Ni
- Plug connector M12, 90 deg IP67 union nut, Cu Sn/Ni

The IP protection classes are only maintained if the dummy cap is used or the cable is connected.

14.1.3 Weld-in accessory

For details, refer to TI00426F/00/EN "Weld-in adapters, process adapters and flanges".

14.2 Device Viewer

All the spare parts for the device, along with the order code, are listed in the *Device Viewer* (www.endress.com/deviceviewer).

15 Technical data

15.1 Output

Output signal

Current output

4 to 20 mA with superimposed digital communication protocol HART, 2-wire

The current output offers a choice of three different operating modes:
- 4.0 to 20.5 mA
- NAMUR NE 43: 3.8 to 20.5 mA (factory setting)
- US mode: 3.9 to 20.8 mA

Signal on alarm

Signal on alarm in accordance with NAMUR recommendation NE 43.

Options:
- Max alarm: can be set from 21.5 to 23 mA
- Min. alarm: < 3.6 mA (factory setting)

Load

4 to 20 mA HART

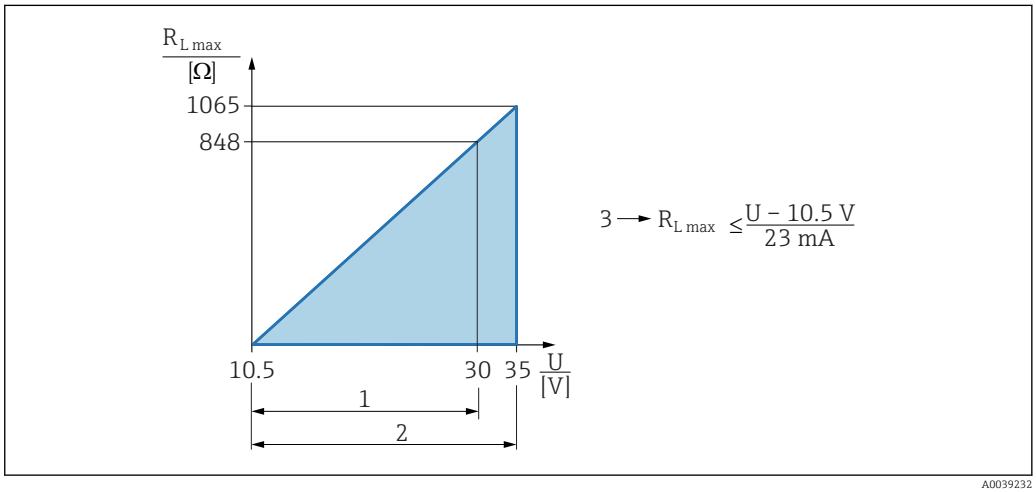

1 Power supply 10.5 to 30 VDC Ex i
2 Power supply 10.5 to 35 VDC, for other types of protection and non-certified device versions
3 R_{Lmax} maximum load resistance
U Supply voltage

Operation via handheld terminal or PC with operating program: take minimum communication resistance of 250 Ω into consideration.

Damping

A damping affects all outputs (output signal, display). Damping can be enabled as follows:
- Via the onsite display, Bluetooth, handheld terminal or PC with operating program, continuous from 0 to 999 seconds
- Factory setting: 1 s

Ex connection data

See the separate technical documentation (Safety Instructions (XA)) on www.endress.com/download.

Linearization

The device's linearization function allows the user to convert the measured value to any units of height or volume. User-defined linearization tables of up to 32 value pairs can be entered if necessary.

Protocol-specific data

HART

- Manufacturer ID: 17 (0x11{hex})
- Device type ID: 0x1131
- Device revision: 1
- HART specification: 7
- DD revision: 1
- Device description files (DTM, DD) information and files at:
  - www.endress.com
  - www.fieldcommgroup.org
- HART load: min. 250 Ohm

HART device variables (preset at the factory)

The following measured values are assigned to the device variables at the factory:

Device variable	Measured value
Primary variable (PV) [1]	Pressure [2]
Secondary variable (SV)	Sensor temperature
Tertiary variable (TV)	Electronics temperature
Quaternary variable (QV)	Sensor pressure [3]

1) The PV is always applied to the current output.
2) The pressure is the calculated signal after damping and position adjustment.
3) The sensor pressure is the raw sensor signal before damping and position adjustment.

The assignment of the measured values to the device variables can be changed in the following submenu:
Application → HART output → HART output

In a HART Multidrop loop, only one device may use the analog current value for signal transmission. For all other devices in the **"Loop current mode" parameter**, select the **Disable** option.

Choice of HART device variables

- **Pressure** option (after position correction and damping)
- Scaled variable
- Sensor temperature
- Sensor pressure
  Sensor Pressure is the raw signal from sensor before damping and position adjustment.
- Electronics temperature
- Terminal current
  The terminal current is the read-back current on terminal block.
- Terminal voltage 1
  Visibility depends on order options or device settings
- **Noise of pressure signal** option and **Median of pressure signal** option
  Visible if Heartbeat Technology ordered
- Percent of range
- Loop current
  The loop current is the output current set by the applied pressure.

Supported functions

- Burst mode
- Additional transmitter status
- Device locking

Wireless HART data

- Minimum starting voltage: 10.5 V
- Start-up current: 3.6 mA
- Start-up time: <5 s
- Minimum operating voltage: 10.5 V
- Multidrop current: 4 mA

15.2 Environment

Ambient temperature range

The following values apply up to a process temperature of +85 °C (+185 °F). At higher process temperatures, the permitted ambient temperature is reduced.

- Without LCD display:
  - Standard: −40 to +85 °C (−40 to +185 °F)
  - Optionally available: −50 to +85 °C (−58 to +185 °F)with restricted operating life and performance
  - Optionally available: −54 to +85 °C (−65 to +185 °F); below −50 °C (−58 °F): devices can be permanently damaged
- With LCD display: −40 to +85 °C (−40 to +185 °F) with limitations in optical properties, such as display speed and contrast. Can be used without limitations up to −20 to +60 °C (−4 to +140 °F)
- Devices with PVC-coated capillary armor: −25 to +80 °C (−13 to +176 °F)
- Separate housing: −20 to +60 °C (−4 to +140 °F)

Applications with very high temperatures: use either a diaphragm seal on one side with a temperature isolator, or a diaphragm seal on one side or both sides with a capillary. Use a mounting bracket!

If vibrations additionally occur in the application: use a device with a capillary.

Hazardous area

- For devices for use in hazardous areas, see the Safety Instructions, Installation Drawing or Control Drawing
- Devices that have the most common explosion protection certificates (e.g. ATEX/ IEC Ex, etc.) can be used in explosive atmospheres with an ambient temperature of −54 to +85 °C (−65 to +185 °F) (optionally available). The functionality of the explosion protection Ex ia is guaranteed for ambient temperatures to −50 °C (−58 °F) (optionally available).
  At temperatures ≤ −50 °C (−58 °F), explosion protection is guaranteed by the housing in the case of flameproof enclosure (Ex d) type of protection. The functionality of the transmitter cannot be fully guaranteed. The Ex ia capability can no longer be guaranteed.

Storage temperature

- Without LCD display:
  - Standard: −40 to +90 °C (−40 to +194 °F)
  - Optionally available: −50 to +90 °C (−58 to +194 °F) with restricted operating life and performance
  - Optionally available: −54 to +90 °C (−65 to +194 °F); below −50 °C (−58 °F): Ex d devices can be permanently damaged
- With LCD display: −40 to +85 °C (−40 to +185 °F)
- Separate housing: −40 to +60 °C (−40 to +140 °F)

With M12 plug, elbowed: −25 to +85 °C (−13 to +185 °F)

Devices with PVC-coated capillary armor: −25 to +90 °C (−13 to +194 °F)

Operating altitude

Up to 5 000 m (16 404 ft) above sea level.

Climate class

Class 4K4H (air temperature: −20 to +55 °C (−4 to +131 °F), relative humidity: 4 to 100 %) satisfied as per DIN EN 60721-3-4.

Condensation is possible.

Atmosphere

Operation in very corrosive environment

For corrosive environments (e.g. maritime environment / coastal areas), Endress+Hauser recommends the use of a PVC-coated capillary armor or a PTFE capillary armor for capillaries and the stainless steel housing. The transmitter can be additionally protected by a special coating (**T**echnical **S**pecial **P**roduct (TSP)).

Degree of protection

Test as per IEC 60529 and NEMA 250-2014

Housing and process connection

IP66/68, TYPE 4X/6P

(IP68: (1.83 mH_2O for 24 h))

Cable entries

- Gland M20, plastic, IP66/68 TYPE 4X/6P
- Gland M20, brass nickel plated, IP66/68 TYPE 4X/6P
- Gland M20, 316L, IP66/68 TYPE 4X/6P
- Thread M20, IP66/68 TYPE 4X/6P
- Thread G1/2, IP66/68 TYPE 4X/6P
  If the G1/2 thread is selected, the device is delivered with an M20 thread as standard and a G1/2 adapter is included with the delivery, along with the corresponding documentation
- Thread NPT1/2, IP66/68 TYPE 4X/6P
- Dummy plug transport protection: IP22, TYPE 2
- Plug HAN7D, 90 deg. IP65 NEMA Type 4X
- Plug M12
  When housing is closed and connecting cable is plugged in: IP66/67 NEMA Type 4X
  When housing is open or connecting cable is not plugged in: IP20, NEMA Type 1

NOTICE

Plug M12 and plug HAN7D: incorrect mounting can invalidate the IP protection class!

- ▶ The degree of protection only applies if the connecting cable used is plugged in and screwed tight.
- ▶ The degree of protection only applies if the connecting cable used is specified according to IP67 NEMA Type 4X.
- ▶ The IP protection classes are only maintained if the dummy cap is used or the cable is connected.

Process connection and process adapter when using the separate housing

FEP cable

- IP69 (on sensor side)
- IP66 TYPE 4/6P
- IP68 (1.83 mH_2O for 24 h) TYPE 4/6P

PE cable

- IP69 (on sensor side)
- IP66 TYPE 4/6P
- IP68 (1.83 mH_2O for 24 h) TYPE 4/6P

Vibration resistance

Aluminum dual compartment housing

Mechanical construction	Sine wave oscillation IEC 61298-3:2008	Shock
Device with temperature isolator	10 Hz to 60 Hz: ±0.075 mm (0.0030 in) 60 Hz to 500 Hz: 1 g	15 g

Stainless steel dual compartment housing

Mechanical construction	Sine wave oscillation IEC 61298-3:2008	Shock
Device with temperature isolator	10 Hz to 60 Hz: ±0.075 mm (0.0030 in) 60 Hz to 500 Hz: 1 g	15 g

Dual compartment housing, L-form

Mechanical construction	Sine wave oscillation IEC 61298-3:2008	Shock
Device with temperature isolator [1)]	10 Hz to 60 Hz: ±0.075 mm (0.0030 in) 60 Hz to 500 Hz: 1 g	15 g

1) Use either a device with a temperature isolator or with a capillary in applications with very high temperatures. If vibrations additionally occur in the application, Endress+Hauser recommends the use of a device with a capillary. If a device with a temperature isolator or capillary is used, the device must be mounted with a mounting bracket.

Electromagnetic compatibility (EMC)

- Electromagnetic compatibility as per EN 61326 series and NAMUR recommendation EMC (NE21)
- With regard to the safety function (SIL), the requirements of EN 61326-3-x are satisfied
- Maximum deviation with interference influence: < 0.5% of span with full measuring range (TD 1:1)

For more details refer to the EU Declaration of Conformity.

15.3 Process

Process temperature range

NOTICE

The permitted process temperature depends on the process connection, the ambient temperature and the type of approval.

- ▶ All the temperature data in this document must be taken into consideration when selecting the device.

Diaphragm seal fill fluid

Fill fluid	P_{abs} = 0.05 bar (0.725 psi) [1]	P_{abs} ≥1 bar (14.5 psi) [2]
Silicone oil	−40 to +180 °C (−40 to +356 °F)	−40 to +250 °C (−40 to +482 °F)
High-temperature oil	−20 to +200 °C (−4 to +392 °F)	−20 to +400 °C (−4 to +752 °F) [3] [4] [5]
Low-temperature oil	−70 to +120 °C (−94 to +248 °F)	−70 to +180 °C (−94 to +356 °F)
Vegetable oil	−10 to +160 °C (+14 to +320 °F)	−10 to +220 °C (+14 to +428 °F)
Inert oil	−40 to +100 °C (−40 to +212 °F)	−40 to +175 °C (−40 to +347 °F) [6] [7]

1) Permitted temperature range at p_{abs} = 0.05 bar (0.725 psi) (observe temperature limits of the device and the system!)
2) Permitted temperature range at p_{abs} ≥1 bar (14.5 psi) (observe temperature limits of the device and the system!)
3) 325 °C (617 °F) at ≥1 bar (14.5 psi) absolute pressure
4) 350 °C (662 °F) at ≥1 bar (14.5 psi) absolute pressure (max. 200 hours)
5) 400 °C (752 °F) at ≥1 bar (14.5 psi) absolute pressure (max. 10 hours)
6) 150 °C (302 °F) at ≥1 bar (14.5 psi) absolute pressure
7) 175 °C (347 °F) at ≥1 bar (14.5 psi) absolute pressure (max. 200 hours)

Fill fluid	Density [1] kg/m³
Silicone oil	970
High-temperature oil	995
Low-temperature oil	940
Vegetable oil	920
Inert oil	1900

1) Density of the diaphragm seal fill fluid at 20 °C (68 °F).

The calculation of the operating temperature range of a diaphragm seal system depends on the fill fluid, capillary length and capillary internal diameter, process temperature and oil volume of the diaphragm seal. Detailed calculations, e.g. for temperature ranges, negative pressure and temperature ranges, are done separately in the Applicator "Sizing Diaphragm Seal".

A0038925

Oxygen applications (gaseous)

Oxygen and other gases can react explosively to oils, grease and plastics. The following precautions must be taken:
- All components of the system, such as measuring devices, must be cleaned in accordance with the national requirements.
- Depending on the materials used, a certain maximum temperature and a maximum pressure must not be exceeded with oxygen applications.

The cleaning of the device (not accessories) is offered as an optional service.

- p_{max}: PN of flange, max. 80 bar (1 200 psi)
- T_{max}: 60 °C (140 °F)

Seals

Seal on the LP side (–)	Temperature	Pressure specifications
FKM	–20 to +85 °C (–4 to +185 °F)	-
FKM Cleaned of oil and grease	–10 to +85 °C (+14 to +185 °F)	-
FKM Cleaned for oxygen service	–10 to +60 °C (+14 to +140 °F)	-
FFKM	–10 to +85 °C (+14 to +185 °F)	MWP: 87 bar (1 262 psi) OPL: 130 bar (1 885 psi)
	+25 to +85 °C (+77 to +185 °F)	MWP: 107 bar (1 552 psi) OPL: 160 bar (2 320 psi)
EPDM	–40 to +85 °C (–40 to +185 °F)	-
PTFE	–40 to +85 °C (–40 to +185 °F)	PN > 160 bar (2 320 psi) Minimum process temperature: –20 °C (–4 °F)
PTFE Cleaned for oxygen applications	–20 to +60 °C (–4 to +140 °F)	PN > 160 bar (2 320 psi) Minimum process temperature: –20 °C (–4 °F)

- Diaphragm seal and capillary welded: Pay attention to the temperature application limits of the diaphragm seal fill fluid
- PMD78B generally OPL on one side 160 bar (2 320 psi), on both sides 240 bar (3 480 psi)
  Lower temperatures on request

Process temperature range (temperature at transmitter)

Diaphragm seal on one side with temperature isolator

- Dependent on design (see "Design" section)
- Dependent on diaphragm seal and fill fluid: –70 to +400 °C (–94 to +752 °F)
- Pay attention to the temperature application limits of the diaphragm seal fill fluid
- Observe the maximum gauge pressure and maximum temperature
- Pay attention to the process temperature range of the seal

Design:
- Transmitter horizontal, temperature isolator long: 400 °C (752 °F)
- Transmitter vertical, temperature isolator long: 300 °C (572 °F)
- Transmitter horizontal, temperature isolator short: 200 °C (392 °F)
- Transmitter vertical, temperature isolator short: 200 °C (392 °F)

Diaphragm seal on one side or both sides with capillary

- Depends on diaphragm seal and fill fluid: –70 °C (–94 °F) up to +400 °C (+752 °F)
- A4 screws of process connection, threaded separator: T_{min} –60 °C (–76 °F)
- Observe the maximum gauge pressure and maximum temperature

Diaphragm seal with tantalum membrane

−70 to +300 °C (−94 to +572 °F)

Devices with PTFE-coated diaphragm seal process membrane

The anti-stick coating has very good anti-friction properties and protects the process membrane against abrasive media.

NOTICE

Destruction of the device due to incorrect use of PTFE coating!

- The PTFE coating used is designed to protect the unit against abrasion. It does not provide protection against corrosive media.

Area of application of the 0.25 mm (0.01 in) PTFE foil on AISI 316L (1.4404/1.4435) process membrane, see the following graphic:

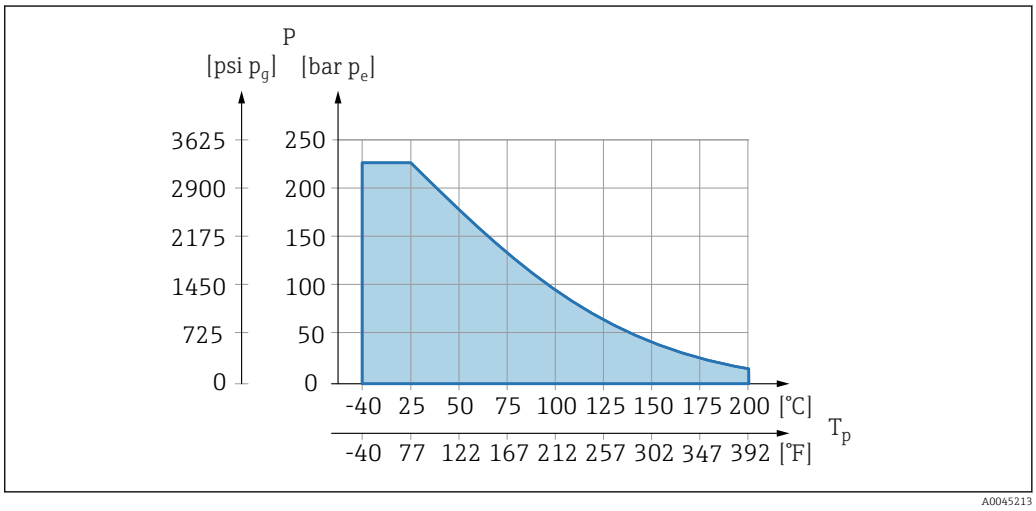

For vacuum applications: $p_{abs} \leq 1$ bar (14.5 psi) to 0.05 bar (0.725 psi) to max. +150 °C (302 °F).

If a PTFE coating has been selected, a conventional process membrane is always delivered.

Diaphragm seal capillary armor

Process temperature depending on the ambient temperature.

- 316L: No restrictions
- PTFE: No restrictions
- PVC: See the following diagram

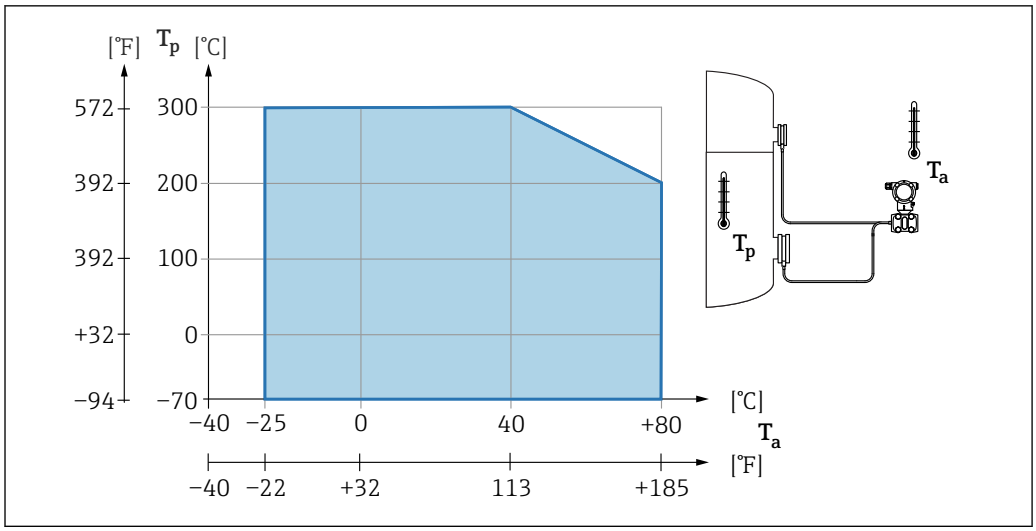

Process pressure range

Pressure specifications

WARNING

The maximum pressure for the device depends on the lowest-rated component with regard to pressure (components are: process connection, optional mounted parts or accessories).

- Only operate the device within the specified limits for the components!
- MWP (maximum working pressure): The MWP is specified on the nameplate. This value is based on a reference temperature of +20 °C (+68 °F) and may be applied to the device for an unlimited period of time. Note temperature dependence of MWP. For flanges, refer to the following standards for the permitted pressure values at higher temperatures: EN 1092-1 (with regard to their stability/temperature property, the materials 1.4435 and 1.4404 are grouped together under EN 1092-1; the chemical composition of the two materials can be identical.), ASME B 16.5a, JIS B 2220 (the latest version of the standard applies in each case). MWP data that deviate from this are provided in the relevant sections of the Technical Information.
- The overpressure limit corresponds to the overpressure limit OPL of the entire device. This value refers to a reference temperature of +20 °C (+68 °F).
- The Pressure Equipment Directive (2014/68/EU) uses the abbreviation "PS". The abbreviation "PS" corresponds to the MWP (maximum working pressure) of the device.
- In the case of sensor range and process connection combinations where the overpressure limit (OPL) of the process connection is smaller than the nominal value of the sensor, the device is set at the factory, at the very maximum, to the OPL value of the process connection. If the entire sensor range must be used, select a process connection with a higher OPL value (1.5 x PN; MWP = PN).
- Oxygen applications: do not exceed values for P_{max} and T_{max}.

Thermal insulation

Thermal insulation when mounting with a temperature isolator

The device may only be insulated up to a certain height. The maximum permitted insulation height applies to an insulation material with a thermal conductivity ≤ 0.04 W/(m x K) and to the maximum permitted ambient temperature and process temperature. The data were determined under the application "quiescent air".

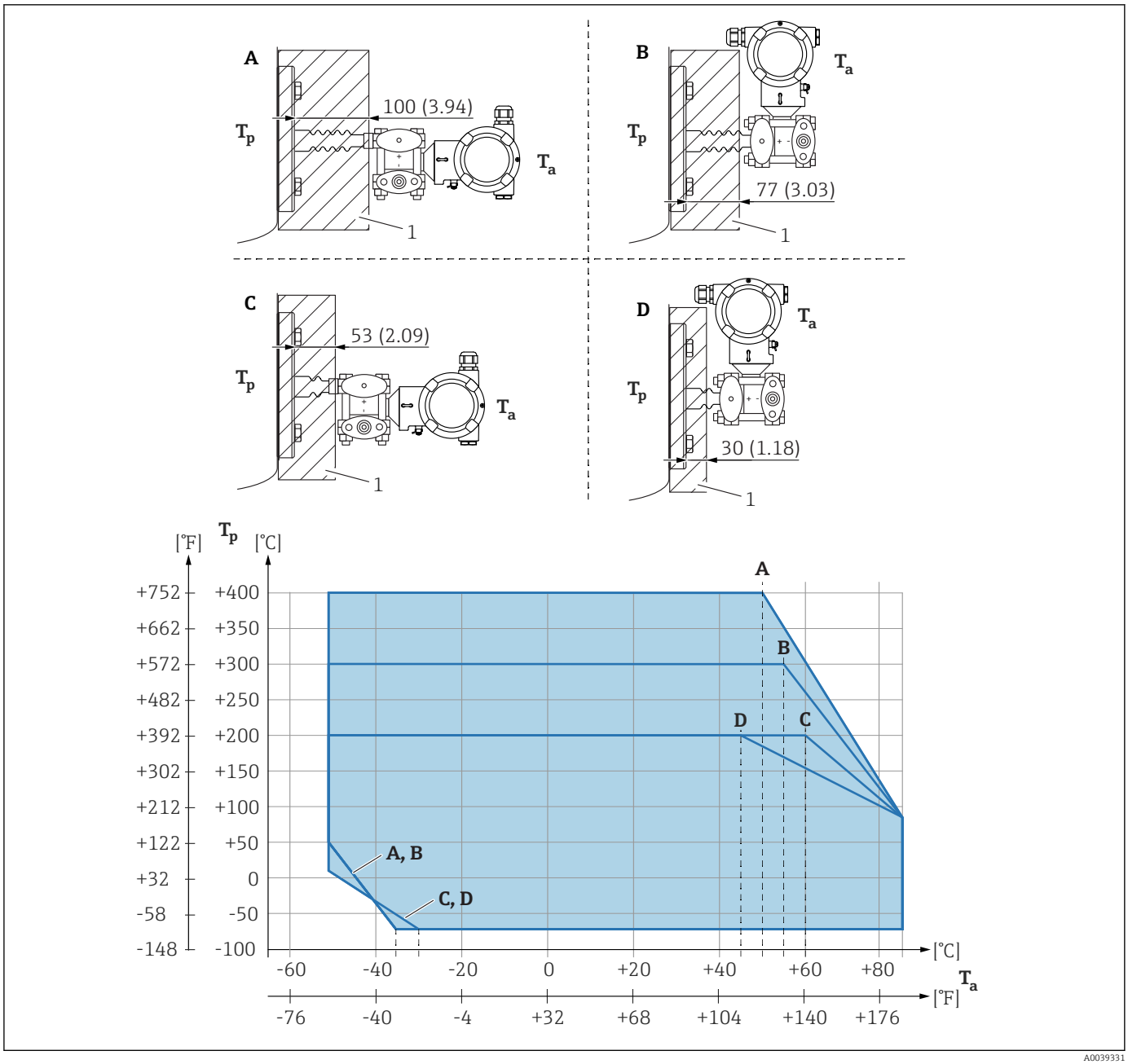

1 Insulation material
A Transmitter horizontal, temperature isolator long
B Transmitter vertical, temperature isolator long
C Transmitter horizontal, temperature isolator short
D Transmitter vertical, temperature isolator short

Without insulation, the ambient temperature decreases by 5 K.

Item	T_a [1]	T_p [2]
A	50 °C (122 °F)	400 °C (752 °F)
	85 °C (185 °F)	85 °C (185 °F) [3]
	−50 °C (−58 °F)	50 °C (122 °F)
	−35 °C (−31 °F)	−70 °C (−94 °F)
B	55 °C (131 °F)	300 °C (572 °F) [3]
	85 °C (185 °F)	85 °C (185 °F)

Item	T_a [1]	T_p [2]
	−50 °C (−58 °F)	50 °C (122 °F)
	−35 °C (−31 °F)	−70 °C (−94 °F)
C	60 °C (140 °F)	200 °C (392 °F) [3]
	85 °C (185 °F)	85 °C (185 °F)
	−50 °C (−58 °F)	10 °C (50 °F)
	−30 °C (−22 °F)	−70 °C (−94 °F)
D	67 °C (153 °F)	200 °C (392 °F) [3]
	85 °C (185 °F)	85 °C (185 °F)
	−50 °C (−58 °F)	10 °C (50 °F)
	−30 °C (−22 °F)	−70 °C (−94 °F)

1) Maximum ambient temperature at transmitter
2) Maximum process temperature
3) Process temperature: max. +400 °C (+752 °F), depending on the diaphragm seal fill fluid used

Ultrapure gas applications

Endress+Hauser also offers devices for special applications, such as for ultrapure gas, that are cleaned of oil and grease. No special restrictions regarding the process conditions apply to these devices.

Hydrogen applications

A **gold-coated** metal process membrane offers universal protection against hydrogen diffusion, both in gas applications and in applications with water-based solutions.

Index

A
Access authorization to parameters
Read access . . . 36
Write access . . . 36
Access code . . . 36
Incorrect input . . . 36

B
Bluetooth® wireless technology . . . 38

C
CE mark (Declaration of Conformity) . . . 10
Cleaning . . . 70

D
DD . . . 41
Declaration of Conformity . . . 10
Device description files . . . 41
Device documentation
Supplementary documentation . . . 8
Device locking, status . . . 56
Device Viewer . . . 71
DeviceCare . . . 40
Diagnosis
Symbols . . . 62
Diagnostic event . . . 63
In the operating tool . . . 64
Diagnostic events . . . 62
Diagnostic list . . . 64
Diagnostic message . . . 62
Display values
For locking status . . . 56
Disposal . . . 73

E
Event history . . . 67
Event text . . . 63
Events list . . . 67
Exterior cleaning . . . 70

F
FieldCare . . . 40
Function . . . 40
Filtering the event logbook . . . 67
FV (HART variable) . . . 41

H
HART integration . . . 41
HART protocol . . . 44
HART variables . . . 41

I
Intended use . . . 9

L
Local display
see Diagnostic message
see In alarm condition

M
Maintenance . . . 70

N
Nameplate . . . 15

O
Operating elements
Diagnostic message . . . 63
Operation . . . 56
Operational safety . . . 9

P
Product safety . . . 10
PV (HART variable) . . . 41

R
Read access . . . 36
Reading off measured values . . . 56
Repair concept . . . 71
Requirements concerning the staff . . . 9

S
Safety instructions
Basic . . . 9
Service interface (CDI) . . . 39, 44
Settings
Adapting the device to process conditions . . . 56
Spare parts . . . 71
Nameplate . . . 71
Status signals . . . 62
Submenu
Events list . . . 67
Measured values . . . 56
SV (HART variable) . . . 41

T
Troubleshooting . . . 58
Turning the display module . . . 27
TV (HART variable) . . . 41

U
Using the device
see Intended use
Using the devices
Borderline cases . . . 9
Incorrect use . . . 9

W
Workplace safety . . . 9
Write access . . . 36

www.addresses.endress.com

Endress+Hauser

People for Process Automation