TI01265C/07/EN/05.21
71532815
2021-01-31

Technical Information
Liquiline System CA80CR

Colorimetric analyzer for chromate (Cr(VI))

Integrated controller with up to 2 measuring channels and digital Memosens technology

Application

The Liquiline System CA80CR is a wet-chemical analyzer for the almost continuous determination of chromate concentrations (Cr (VI)) in liquid media.

The analyzer is designed for use in the following applications:
- Optimization of the treatment efficiency of industrial wastewater treatment plants
- Monitoring of drinking water
- Monitoring of membrane filtration systems
- Monitoring of limit values for the discharge of industrial wastewater

Your benefits

- Easy upgrade to measuring station by connecting up to 4 Memosens sensors
- Two-channel device available
- Digital fieldbuses (e.g. PROFINET, PROFIBUS DP, Modbus TCP, Modbus RS485 and Ethernet IP) and web server
- Simple, tool-free maintenance

Endress+Hauser
People for Process Automation

Table of contents

Function and system design 4
Colorimetric measuring principle 4
Chromium and chromate 4
Photometric determination of chromate 4
Cross-sensitivity 4
Measuring system 5

Equipment architecture 9
Function diagram 9
Slot and port assignment 10

Communication and data processing 10

Dependability 11
Reliability thanks to Memosens technology 11
Maintainability 11
Self-monitoring functions 13
Data security 13
IT security 14

Input 14
Measured variables 14
Measuring range 14
Types of input 14
Input signal 14
Current input, passive 14
Cable specification (for optional sensors with Memosens technology) 14

Output 14
Output signal 14
Signal on alarm 15
Load 15
Transmission behavior 15

Current outputs, active 15
Span 15
Signal characteristic 16
Electrical specification 16
Cable specification 16

Relay outputs 16
Electrical specification 16

Protocol-specific data 17
PROFIBUS DP 17
Modbus RS485 17
Modbus TCP 17
Web server 17
EtherNet/IP 18
PROFINET 19

Power supply 19
Supply voltage 19
Fieldbus connection 20
Power consumption 20
Fuse 20
Cable entries 20
Cable specification 20
Connecting optional modules 20
Sensor connection (optional) 23

Performance characteristics 23
Maximum measured error 23
Maximum measured error for sensor inputs 23
Maximum measured error for current inputs and outputs . . 23
Repeatability 23
Repeatability of sensor inputs 23
Measuring interval 23
Sample requirement 23
Reagent requirement 24
Standard requirement 24
Calibration interval 24
Maintenance interval 24
Maintenance effort 24

Installation 24
Mounting location 24
Installation instructions 24

Environment 25
Ambient temperature range 25
Storage temperature 25
Humidity 25
Degree of protection 25
Electromagnetic compatibility 25
Electrical safety 25
Pollution degree 25

Process 25
Sample temperature 25
Consistency of the sample 25
Sample supply 25

Mechanical construction 26
Dimensions 26
Weight 27
Materials 27
Process connection 28
Hose entries 28
Hose specification (self-priming analyzer) 28

Operability 28
Operating concept 28
Display 28
Remote operation 29
Language packages 30

Certificates and approvals 30
CE mark 30
Other standards and guidelines 30

Ordering information 31
Product page 31
Product Configurator 31

Accessories 31
Device-specific accessories 31
Communication-specific accessories 35
System components 36

Function and system design

Colorimetric measuring principle

After sample preparation, some of the permeate is pumped into the mixing/reaction chamber. The specific color reagent is metered exactly in a defined mixture ratio. The chemical reaction causes the characteristic change in the color of the sample. The multispectral photometer determines the level of absorption by the sample at defined wavelengths. The analyzed wavelengths, and their relationships to one another, are parameter-specific.

Based on proportionality the amount of light absorption is a direct indicator of the concentration of the parameter under analysis in the sample. In order to compensate for any interference influences, a reference measurement is performed before the actual measurement. This reference signal is subtracted from the measuring signal. The temperature in the photometer is kept constant to ensure a reproducible reaction that takes place within a short period of time.

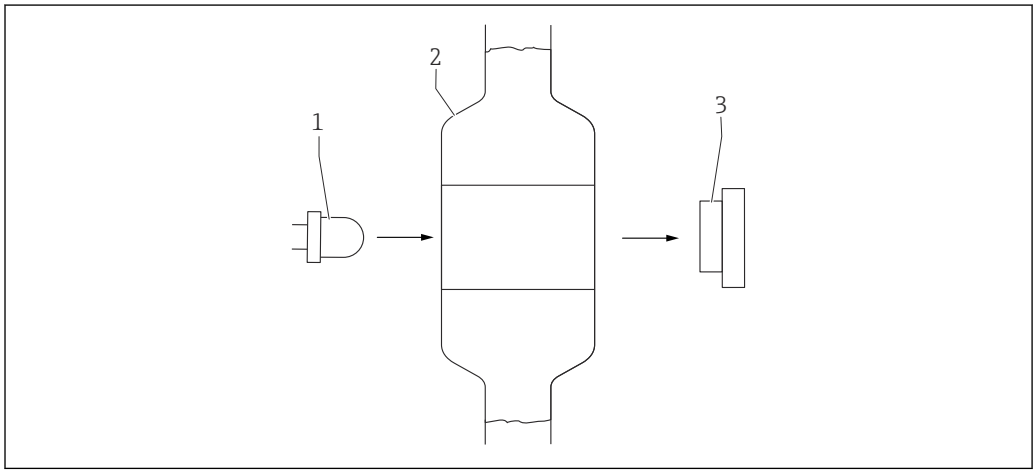

1 Colorimetric measuring principle

1 Multispectral LED unit (for measurement/reference)
2 Cuvette - mixing and reaction vessel
3 Detector (for measurement/reference)

Chromium and chromate

Chromium occurs in different oxidation states, of which only the trivalent (Cr^{3+}) and the hexavalent (chromate, CrO_4^{2-} and dichromate, $Cr_2O_7^{2-}$) are of significance in process applications. While Cr(VI) is recognized as a carcinogen, Cr(III) is only slightly toxic and is an essential trace element in protein synthesis. National standards stipulate limit values for chromate concentration. The German drinking water ordinance, for example, stipulates a limit value for total chromium of 50 µg/l. Separate standards apply to industrial wastewater. The current limit value for tanneries is 2 mg/l, and for electroplating plants the limit value is 0.1 mg/l.

Photometric determination of chromate

Diphenylcarbazide method

Chromate (Cr(VI)) reacts with diphenylcarbazide in a mineral acid solution to form a red-violet chelate complex. Chromate (Cr(VI)) is reduced in the process while diphenylcarbazide is oxidized to form diphenylcarbazone. This method records Cr(VI) ions only. Non-dissolved chromium or Cr(III) is not recorded.

Cross-sensitivity

The ions listed were checked with the specified concentrations. A summary effect has not been studied. No cross-sensitivities were observed up to the specified concentrations. [1)]

15 000 mg/l (ppm)	Cl^-
10 000 mg/l (ppm)	Na^+
500 mg/l (ppm)	K^+, Ca^{2+}
100 mg/l (ppm)	Ag^+
70 mg/l (ppm)	Cd^{2+}
50 mg/l (ppm)	SO_4^{2-}, CO_3^{2-}, NO_3^-, Zn^{2+}, Ni^{2+}, CO^{2+}

1) Fe^{3+}, Fe^{2+}, Cu^{2+}, Sn^{2+} decrease the measured value.

5 mg/l (ppm)	Hg^{2+}
50 NTU	Turbidity
4 - 12	pH
70 °dH	Hardness

Measuring system

A complete measuring system comprises:
- Analyzer Liquiline System CA80CR with the configuration ordered
- reagents and standard solution (to be ordered separately)
- Sample conditioning Liquiline System CAT8x0 (optional)

Microfiltration (Liquiline System CAT810)
- Function: pressure pipe sampling and filtration
- Sieve filter, 50 µm
- Control via CA80
  Optional: time control via integrated timer
- Backflushing, with compressed air or water
- Panel version or integration into analyzer stand
- Application: wastewater treatment plant outlet

Membrane filtration (Liquiline System CAT820), ceramic filter version
- Function: sampling and filtration
- Ceramic membrane filter candle; pore size 0.1 µm or 0.4 µm
- Communication via Memosens protocol, control via CA80
- Backflushing with compressed air (version with Memosens technology)
- Easy installation with Flexdip CYH112 (TI00430C)
- Application: aeration, wastewater treatment plant outlet, surface water

Membrane filtration (Liquiline System CAT860)
- Function: sampling and filtration
- Ceramic membrane filter candle; pore size 0.1 µm or 0.4 µm
- Communication via Memosens protocol, control via CA80
- Automatic backflush function with cleaning solution and compressed air
- Easy installation via Flexdip CYH112 (TI00430C)
- Application: wastewater treatment plant inlet

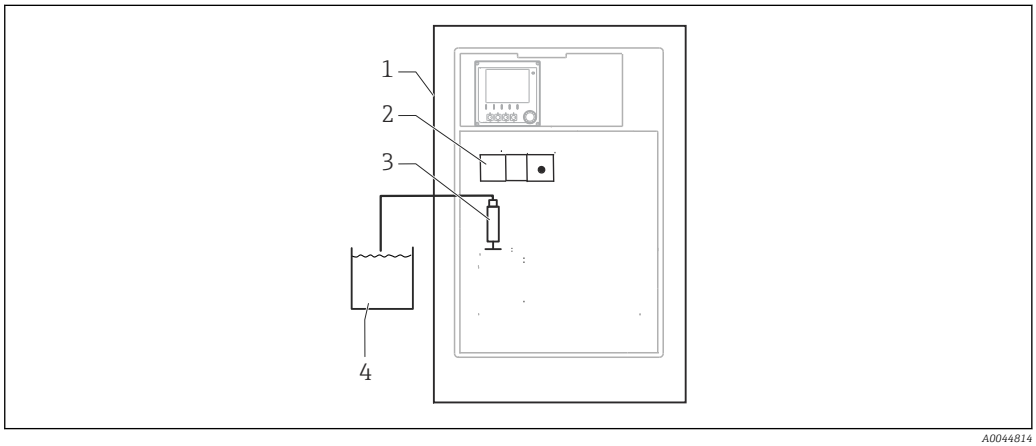

2 Measuring system with Liquiline System, self-priming

1 Liquiline System CA80CR

2 Photometer

3 Dosing dispenser

4 Particle-free sample

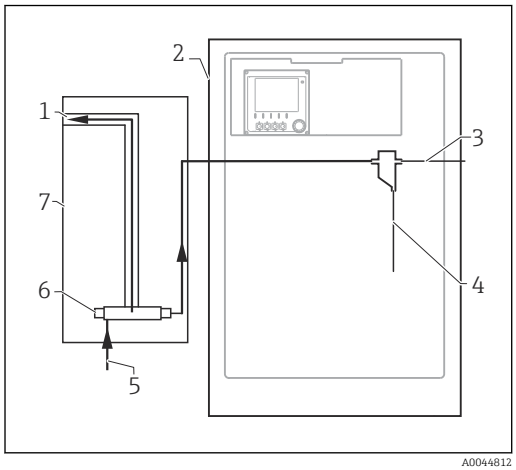

3 Measuring system with Liquiline System CAT810

1 *Overflow*
2 *Liquiline System CA80*
3 *Sample collecting vessel overflow*
4 *Sample*
5 *Pressurized sample*
6 *Filter unit*
7 *Liquiline System CAT810*

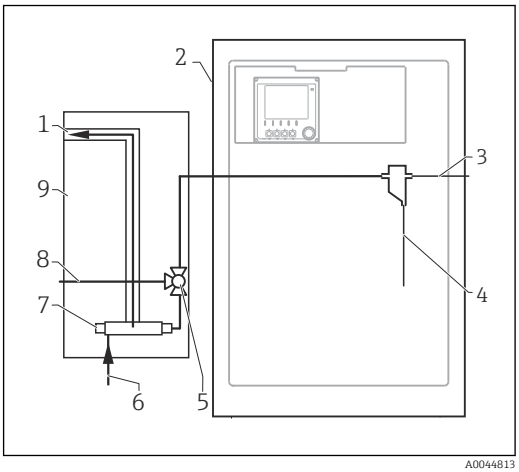

4 Measuring system with Liquiline System CAT810 and cleaning valve

1 *Overflow*
2 *Liquiline System CA80*
3 *Sample collecting vessel overflow*
4 *Sample*
5 *Cleaning valve*
6 *Pressurized sample*
7 *Filter unit*
8 *Purge connection (compressed air or water)*
9 *Liquiline System CAT810*

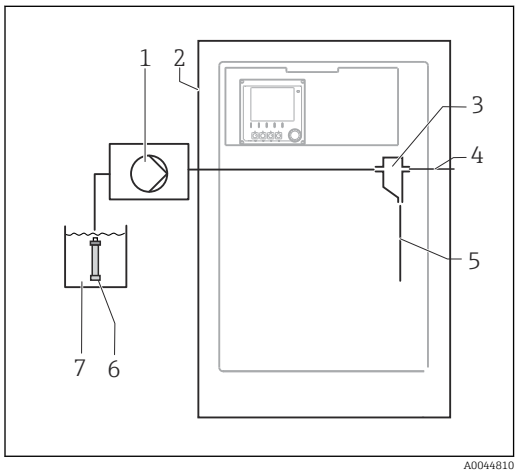

5 Measuring system with Liquiline System CAT820

1 *Pump*
2 *Liquiline System CA80*
3 *Sample collecting vessel*
4 *Sample collecting vessel overflow*
5 *Sample*
6 *Filter (ceramic)*
7 *Medium*

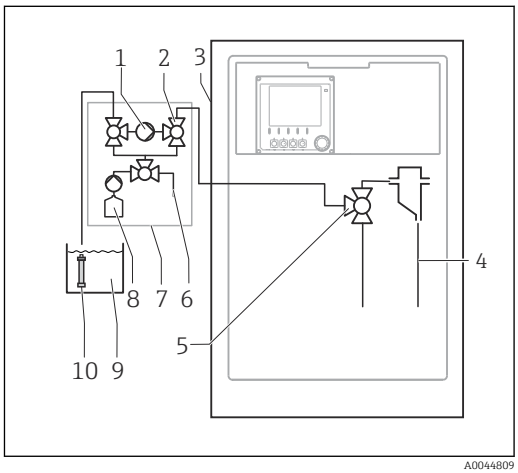

6 Measuring system with Liquiline System CAT860

1 *Pump*
2 *Valve*
3 *Liquiline System CA80*
4 *Sample*
5 *Valve*
6 *Compressed air*
7 *Liquiline System CAT860*
8 *Cleaning solution*
9 *Medium*
10 *Filter (ceramic)*

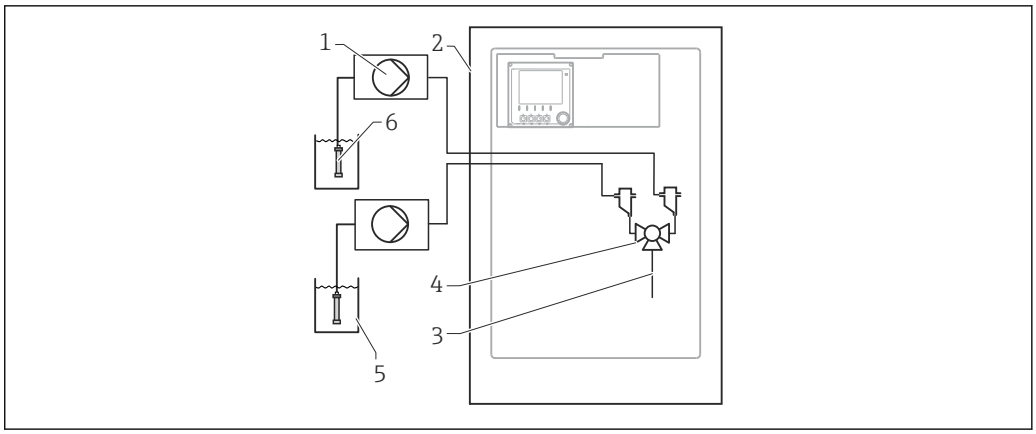

A0044811

7 *Measuring system with 2x Liquiline System CAT820*

1 *Pump*
2 *Liquiline System CA80*
3 *Sample*
4 *Valve*
5 *Medium*
6 *Filter (ceramic)*

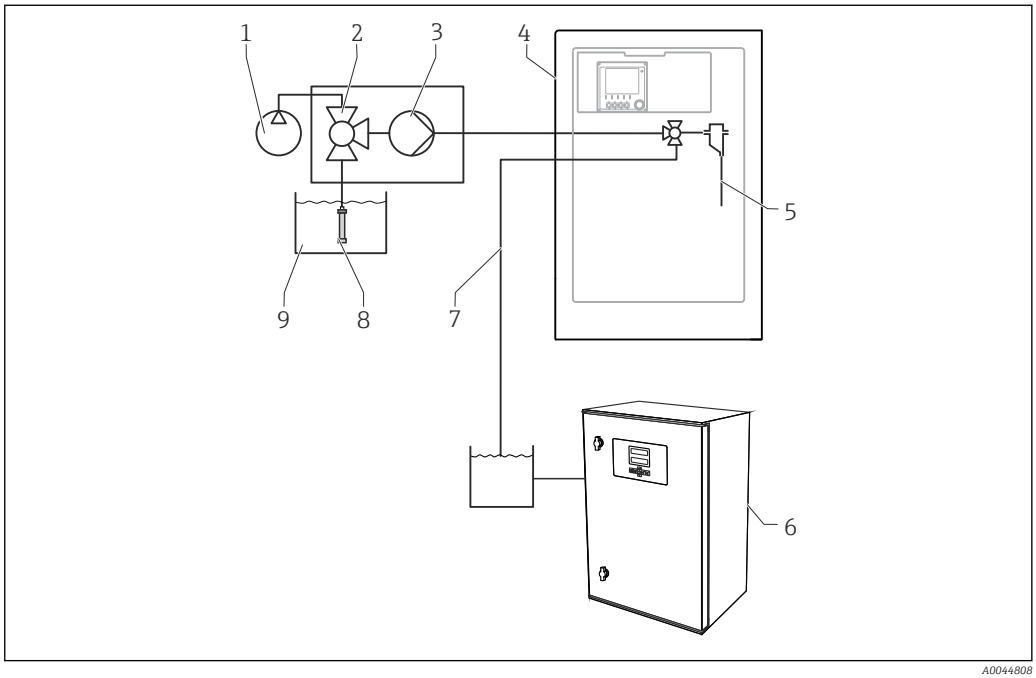

A0044808

8 *Measuring system with Liquiline System CA80, Liquiline System CAT820 and second analyzer*

1 *Backflushing with compressed air (optional)*
2 *Valve (optional)*
3 *Pump*
4 *Liquiline System CA80*
5 *Sample*
6 *Second analyzer*
7 *Sample to second analyzer*
8 *Filter (ceramic)*
9 *Medium*

Customer-specific solution

Prior to analysis, the sample must be prepared at the customer site so that it is particle-free and homogeneous (representative sample). The sample can either be supplied to an external collecting vessel or pumped directly into the sample collecting vessel of the analyzer. The customer-specific sample preparation system must have its own individual control unit.

The version of the Liquiline System CA80 as a self-priming device does not have a collecting vessel with level detection. For this reason, a continuous supply of sample must be guaranteed on the process side.

Equipment architecture

Function diagram

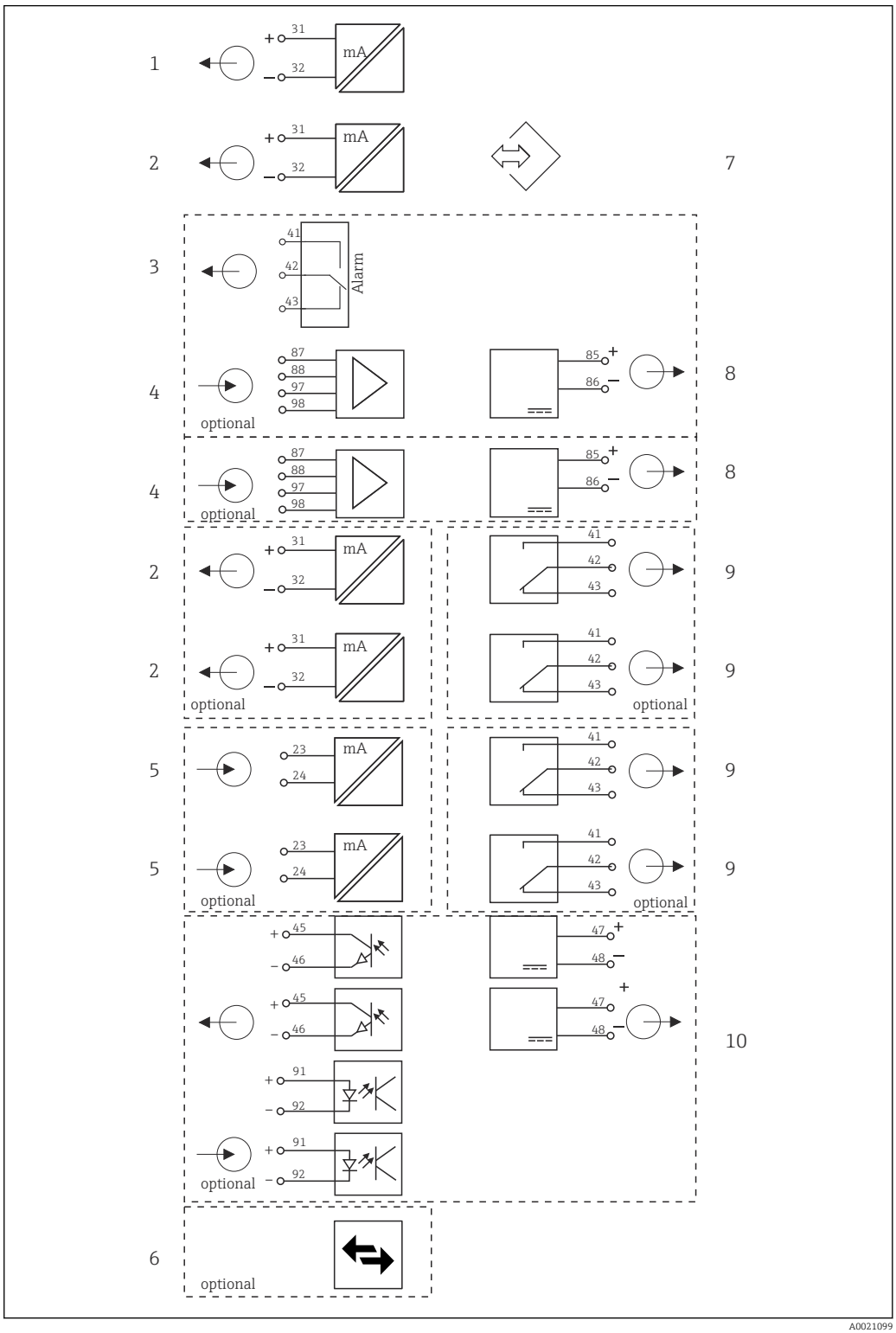

9 *Block diagram CA80*

1 *Current output 1:1*
2 *Current outputs*
3 *Alarm relay*
4 *2 x Memosens input (1 x optional)*
5 *2 x current input (optional)*
6 *Modbus/Ethernet (optional)*
7 *Service interface*
8 *Power supply, fixed cable sensors*
9 *2 or 4 x relays (optional)*
10 *2 digital inputs and outputs (optional)*

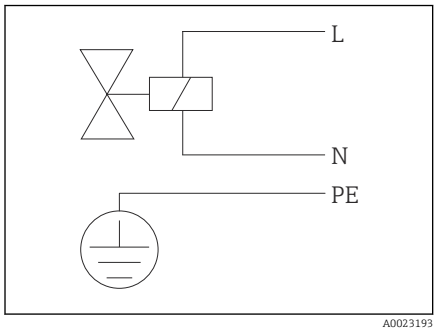

10 *Sample preparation block diagram, Liquiline System CAT810 with cleaning valve*

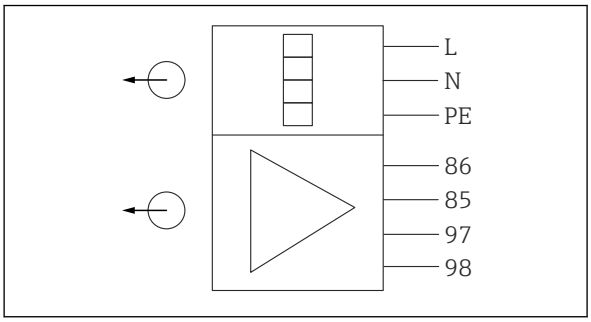

11 *Sample preparation block diagram, Liquiline System CAT820 and CAT860*

85, 86 *Connection for 24-V power supply*

97, 98 *Communication connection*

2 x communication via Memosens protocol (1 x optional), hose heating system

Slot and port assignment

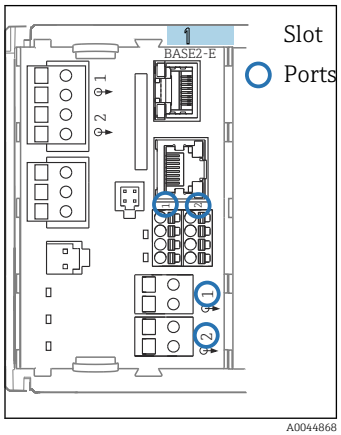

12 *Slot and port assignment*

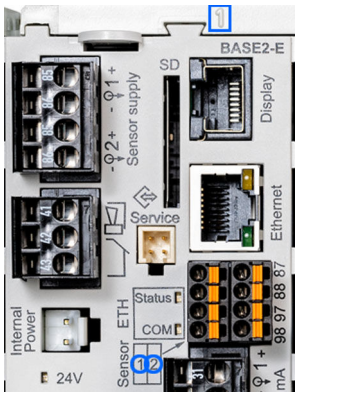

13 *Slot and port assignment*

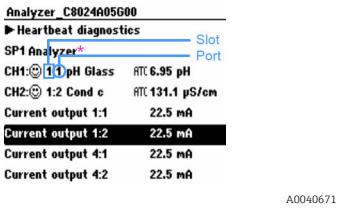

14 *Slots and ports on the display*

* *Analyzer measured value (parameter-specific)*

- Inputs are assigned to measuring channels in the ascending order of the slots and ports.
  In the example above:
  "CH1: 1:1 pH glass" means:
  Channel 1 (CH1) is slot 1 (basic module) : Port 1 (input 1), pH glass sensor
- Outputs and relays are named according to their function, e.g. "current output", and are displayed in ascending order with the slot and port numbers
- Display shows SP1: analyzer measuring channel 1 with sampling point SP1 (measured value display is parameter-specific; is not illustrated in the example)

Communication and data processing

Communication protocols:

- Fieldbuses
  - PROFIBUS DP (Profile 3.02)
  - Modbus TCP or RS485
  - PROFINET
  - EtherNet/IP
- Configuration via Ethernet

Extension module 485 and current outputs

For PROFIBUS DP and Modbus RS485 communication protocols:
A maximum of 2 current outputs can be used in parallel.

Ethernet functionality via Base2 module and current outputs

A maximum of 6 current outputs can be used in parallel.

Bus termination on the device
- Via slide switch at bus module 485
- Displayed via LED "T" on bus module 485

Dependability

Reliability thanks to Memosens technology

Memosens
Memosens makes your measuring point safer and more reliable:
- Non-contact, digital signal transmission enables optimum galvanic isolation
- Completely watertight
- Sensor can be calibrated in a lab, thus increasing the availability of the measuring point in the process
- Intrinsically safe electronics mean operation in hazardous areas is not a problem.
- Predictive maintenance thanks to recording of sensor data, e.g.:
  - Total hours of operation
  - Hours of operation with very high or very low measured values
  - Hours of operation at high temperatures
  - Number of steam sterilizations
  - Sensor condition

Maintainability

Modular design
The modular analyzer can be easily adapted to suit your needs:
- Retrofit extension modules for new or extended range of functions, e.g. current outputs, relays and digital communication
- Upgrade from one channel to two channel analyzer
- Upgrade to measuring station with digital sensors with Memosens technology
- Optional: M12 sensor connector for connecting any kind of Memosens sensor

Data storage
- Independent, integrated ring memories (FIFO) or stack memories for recording:
  - An analog value (e.g. flow, pH value, conductivity)
  - Events (e.g. power failure)
- Analyzer data logbook
  - Scan time: automatically adjusted to the measuring interval
  - Max. 2 data logbooks
  - 20 000 entries per logbook
  - Graphic display (load curves) or numerical list
  - Factory setting: enabled for all channels, ring memory (FIFO)
- Data logbooks for digital sensors:
  - Adjustable scan time: 1 to 3600 s (1 h)
  - Max. 8 data logbooks
  - 150,000 entries per logbook
  - Graphic display (load curves) or numerical list
- Calibration logbook: max. 75 entries
- Hardware logbook:
  - Hardware configuration and modifications
  - Max. 125 entries
- Version logbook:
  - Software updates among other things
  - Max. 50 entries
- Event logbook
- Analyzer event logbook
  - Analyzer-specific events
  - Max. 19 500 entries, ring memory or fill-up buffer for recording
- Operations logbook: max. 250 entries
- Diagnostic logbook: max. 250 entries

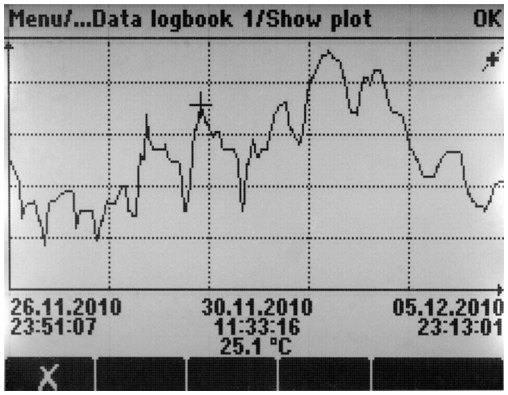

A0024359

15 Data logbook: graphic representation on the display

Mathematical functions (virtual process values)
In addition to "real" process values, which are provided by connected physical sensors or analog inputs, mathematical functions can be used to calculate a maximum of 6 "virtual" process values.

The "virtual" process values can be:
- Output via a current output or a fieldbus
- Used as a controlled variable
- Assigned as a measured variable to a limit switch
- Used as a measured variable to trigger cleaning
- Displayed in user-defined measuring menus

The following mathematical functions are possible:
- Calculation of pH from two conductivity values according to VGB Standard 405, e.g. in boiler feedwater
- Difference between two measured values from different sources, e.g. to monitor membranes
- Differential conductivity, e.g. to monitor the efficiency of ion exchangers
- Degassed conductivity, e.g. for process controls in power plants
- Redundancy to monitor two or three redundant sensors
- rH calculation based on the measured values of a pH and an ORP sensor
- Formula editor as a powerful mathematics tool and for Boolean operations with up to 3 measured values

FieldCare
Configuration and asset management software based on FDT/DTM technology
- Complete device configuration when connected via FXA291 and service interface
- Access to a number of configuration parameters and identification, measuring and diagnostic data when connected via HART modem
- Logbooks can be downloaded in CSV format or binary format for "Field Data Manager" software

Field Data Manager
Visualization software and database for measuring, calibration and configuration data
- SQL database which is protected against manipulation
- Functions to import, save and print out logbooks
- Load curves to display measured values

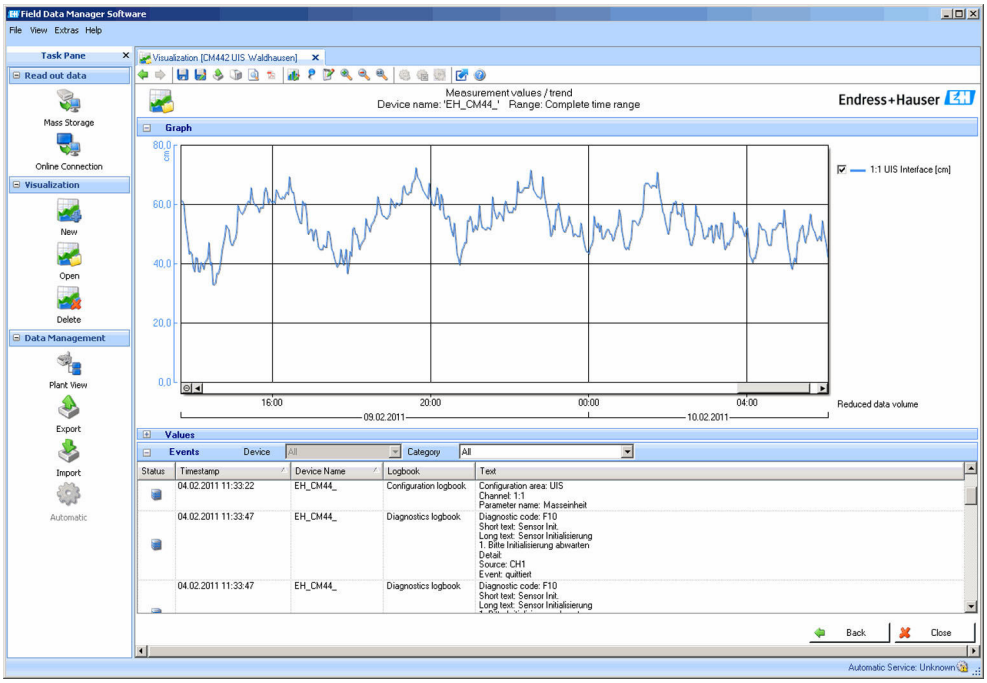

A0016009

16 Field Data Manager: load curve display

SD card
The exchangeable storage medium enables:
- Quick and easy software updates and upgrades
- Quick and easy updates and upgrades to measuring parameter lists
- Data storage of internal device memory (e.g. logbooks)
- Transfer of complete configurations to a device with an identical setup (backup function)
- Transfer of configurations without the TAG and bus address to devices with an identical setup (copy function)

Endress+Hauser offers industry-approved SD cards as accessories. These memory cards provide maximum data security and integrity.

Other SD cards can also be used. However, Endress+Hauser does not accept any responsibility for the data security of such cards.

Self-monitoring functions

Electronics
- Current inputs are deactivated in the event of overcurrent and reactivated once the overcurrent stops.
- Board voltages are monitored and the board temperature is also measured.

Counter
Counters monitor consumables such as reagents or dispensers.

Photometer
- Automatic temperature monitoring
- Active monitoring of communication between the photometer module and the analyzer electronics

Sample preparation (optional)
- Active monitoring of communication between sample preparation with Memosens communication and the analyzer
- Counter for consumables, such as hoses of the peristaltic pump

Sample collecting vessel (optional)
Active monitoring of liquid level in the sample collecting vessel to ensure the supply of liquid to the analyzer

Leak sensor in the housing

Data security

All settings, logbooks etc. are stored in a non-volatile memory to ensure that the data are retained even in the event of a disruption to the power supply.

IT security

We only provide a warranty if the device is installed and used as described in the Operating Instructions. The device is equipped with security mechanisms to protect it against any inadvertent changes to the device settings.

IT security measures in line with operators' security standards and designed to provide additional protection for the device and device data transfer must be implemented by the operators themselves.

Input

Measured variables

Chromate (Cr(VI)), CrO_4 [mg/l, µg/l, ppm, ppb]

Measuring range

CA80CR-**AF:	0.03 to 2.5 mg/l Cr(VI)
CA80CR-**AG:	0.2 to 5.0 mg/l Cr(VI)

Types of input

- 1 or 2 measuring channels (analyzer main parameter)
- 1 to 4 digital sensor inputs for sensors with Memosens protocol (optional)
- Analog current inputs (optional)
- Binary inputs (optional)

Input signal

Depending on version
2 x 0/4 to 20 mA (optional), passive, potentially isolated

Current input, passive

Span
> 0 to 20 mA

Signal characteristic
Linear

Internal resistance
Non-linear

Test voltage
500 V

Cable specification (for optional sensors with Memosens technology)

Cable type
Memosens data cable CYK10 or sensor fixed cable, each with cable end sleeves or M12 round-pin connector (optional)

Cable length
Max. 100 m (330 ft)

Output

Output signal

Depending on version:
- 2 x 0/4 to 20 mA, active, potentially isolated (standard version)
- 4 x 0/4 to 20 mA, active, potentially isolated (version with 2 additional analog outputs)
- 6 x 0/4 to 20 mA, active, potentially isolated (version with 4 additional analog outputs)
- Binary outputs

PROFIBUS DP/RS485	
Signal encoding	EIA/TIA-485, PROFIBUS DP-compliant acc. to IEC 61158
Data transmission rate	9.6 kBd, 19.2 kBd, 45.45kBd, 93.75 kBd, 187.5 kBd, 500 kBd, 1.5 MBd, 6 MBd, 12 MBd
Galvanic isolation	Yes
Connectors	Spring terminal (max. 1.5 mm), bridged internally (T-function), optional M12
Bus termination	Internal slide switch with LED display

Modbus RS485	
Signal encoding	EIA/TIA-485
Data transmission rate	2,400, 4,800, 9,600, 19,200, 38,400, 57,600 and 115,200 baud
Galvanic isolation	Yes
Bus termination	Internal slide switch with LED display

Web server and Modbus TCP	
Signal encoding	IEEE 802.3 (Ethernet)
Data transmission rate	10 / 100 MBd
Galvanic isolation	Yes
Connection	RJ45, M12 optional
IP address	DHCP or configuration using menu

EtherNet/IP	
Signal encoding	IEEE 802.3 (Ethernet)
Data transmission rate	10 / 100 MBd
Galvanic isolation	Yes
Connection	RJ45, M12 optional (D-encoded)
IP address	DHCP (default) or configuration via menu

PROFINET	
Signal encoding	IEEE 802.3 (Ethernet)
Data transmission rate	100 MBd
Galvanic isolation	Yes
Connection	RJ45
Name of station	Via DCP protocol using the configuration tool (e.g. Siemens PRONETA)
IP address	Via DCP protocol using the configuration tool (e.g. Siemens PRONETA)

Signal on alarm

Adjustable, as per NAMUR Recommendation NE 43
- In measuring range 0 to 20 mA:
  Failure current from 0 to 23 mA
- In measuring range 4 to 20 mA:
  Failure current from 2.4 to 23 mA
- Factory setting for failure current for both measuring ranges:
  21.5 mA

Load

Max. 500 Ω

Transmission behavior

Linear

Current outputs, active

Span

0 to 23 mA

Signal characteristic

Linear

Electrical specification

Output voltage
Max. 24 V

Test voltage
500 V

Cable specification

Cable type
Recommended: shielded cable

Cable specification
Max. 2.5 mm^2 (14 AWG)

Relay outputs

Electrical specification

Relay types
- 1 single-pin changeover contact (alarm relay)
- 2 or 4 single-pin changeover contacts (optional with extension modules)

Maximum load
- Alarm relay: 0.5 A
- All other relays: 2.0 A

Relay switching capacity

Base module (Alarm relay)

Switching voltage	Load (max.)	Switching cycles (min.)
230 V AC, cosΦ = 0.8 to 1	0.1 A	700,000
	0.5 A	450,000
115 V AC, cosΦ = 0.8 to 1	0.1 A	1,000,000
	0.5 A	650,000
24 V DC, L/R = 0 to 1 ms	0.1 A	500,000
	0.5 A	350,000

Extension module

Switching voltage	Load (max.)	Switching cycles (min.)
230 V AC, cosΦ = 0.8 to 1	0.1 A	700,000
	0.5 A	450,000
	2 A	120,000
115 V AC, cosΦ = 0.8 to 1	0.1 A	1,000,000
	0.5 A	650,000
	2 A	170,000
24 V DC, L/R = 0 to 1 ms	0.1 A	500,000
	0.5 A	350,000
	2 A	150,000

Minimum load (typical)
- Min. 100 mA at 5 V DC
- Min. 1 mA at 24 V DC
- Min. 5 mA at 24 V AC
- Min. 1 mA at 230 V AC

Protocol-specific data

PROFIBUS DP

Manufacturer ID	11_h
Device type	$155E_h$
Profile version	3.02
Device database files (GSD files)	www.endress.com/profibus Device Integration Manager DIM
Output variables	16 AI blocks, 8 DI blocks
Input variables	4 AO blocks, 8 DO blocks
Supported features	▪ 1 MSCY0 connection (cyclical communication, master class 1 to slave) ▪ 1 MSAC1 connection (acyclical communication, master class 1 to slave) ▪ 2 MSAC2 connections (acyclical communication, master class 2 to slave) ▪ Device lock: The device can be locked using the hardware or software. ▪ Addressing using DIL switches or software ▪ GSD, PDM DD, DTM

Modbus RS485

Protocol	RTU/ASCII
Function codes	03, 04, 06, 08, 16, 23
Broadcast support for function codes	06, 16, 23
Output data	16 measured values (value, unit, status), 8 digital values (value, status)
Input data	4 setpoints (value, unit, status), 8 digital values (value, status), diagnostic information
Supported features	Address can be configured using switch or software

Modbus TCP

TCP port	502
TCP connections	3
Protocol	TCP
Function codes	03, 04, 06, 08, 16, 23
Broadcast support for function codes	06, 16, 23
Output data	16 measured values (value, unit, status), 8 digital values (value, status)
Input data	4 setpoints (value, unit, status), 8 digital values (value, status), diagnostic information
Supported features	Address can be configured using DHCP or software

Web server

The Web server enables full access to the device configuration, measured values, diagnostic messages, logbooks and service data via standard WiFi/WLAN/LAN/GSM or 3G routers with a user-defined IP address.

TCP port	80
Supported features	▪ Remote-controlled device configuration(1 session) ▪ Save/restore device configuration (via SD card) ▪ Logbook export (file formats: CSV, FDM) ▪ Access to Web server via DTM or Internet Explorer ▪ Login ▪ Web server can be switched off

EtherNet/IP

Log	EtherNet/IP	
ODVA certification	Yes	
Device profile	Generic device (product type: 0x2B)	
Manufacturer ID	$0x049E_h$	
Device type ID	0x109F	
Polarity	Auto-MIDI-X	
Connections	CIP	12
	I/O	6
	Explicit message	6
	Multicast	3 consumers
Minimum RPI	100 ms (default)	
Maximum RPI	10000 ms	
System integration	EtherNet/IP	EDS
	Rockwell	Add-on-Profile Level 3, Faceplate for Factory Talk SE
IO data	Input (T → O)	Device status and diagnostic message with highest priority Measured values: ▪ 16 AI (analog input) + Status + Unit ▪ 8 DI (discrete input) + Status
	Output (O → T)	Actuating values: ▪ 4 A0 (analog output) + status + unit ▪ 8 DO (discrete output) + Status

PROFINET

Protocol	"Application layer protocol for decentral device periphery and distributed automation", PNIO Version 2.34
Communication type	100 MBit/s
Conformance Class	Conformance Class B
Netload Class	Netload Class II
Baud rate	Automatic 100 Mbps with full-duplex detection
Cycle times	From 32 ms
Device profile	Application interface identifier 0xF600 Generic device
PROFINET interface	1 port, Realtime Class 1 (RT_CLASS_1)
Manufacturer ID	$0x11_h$
Device type ID	$0x859F_h$
Device description files (GSD)	Information and files under: ▪ www.endress.com On the product page for the device: Documents/Software → Device drivers ▪ www.profibus.com On the website under Products/Product Finder
Polarity	Auto-polarity for automatic correction of crossed TxD and RxD pairs
Supported connections	▪ 1 x AR (IO Controller AR) ▪ 1 x AR (IO-Supervisor Device AR connection allowed) ▪ 1 x Input CR (Communication Relation) ▪ 1 x Output CR (Communication Relation) ▪ 1 x Alarm CR (Communication Relation)
Configuration options for measuring device	▪ Web browser ▪ Manufacturer-specific software (FieldCare, DeviceCare) ▪ Device master file (GSD), can be read out via the integrated web server of the measuring device
Configuration of the device name	DCP protocol
Supported functions	▪ Identification & maintenance Simple device identification via: ▪ Process control system ▪ Nameplate ▪ Measured value status The process variables are communicated with a measured value status ▪ Blinking feature (FLASH_ONCE) via the local display for simple device identification and assignment ▪ Device operation via operating tools (e.g. FieldCare, DeviceCare)
System integration	For information on system integration, see the Operating Instructions ▪ Cyclic data transmission ▪ Overview and description of the modules ▪ Status coding ▪ Startup configuration ▪ Factory setting

Power supply

Supply voltage

- 100 to 120 V AC / 200 to 240 V AC
  or 24 V DC (not available for "Outdoor" version)
- 50 or 60 Hz

Fieldbus connection

Supply voltage: not applicable

Power consumption

All versions except "Outdoor" version

130 VA + 660 VA per hose heater, max. 1450 VA

24-V version: max. 105 W

"Outdoor" version

680 VA + 660 VA per hose heater, max. 2000 VA (version with cooling system) [2)]

Fuse

5 x 20 mm 10 A/250 V fine-wire fuse for hose trace heating system

Cable entries

- 4 x bores for M16, G3/8, NPT3/8", Memosens connection [3)]
- 4 x bores for M20, G1/2, NPT1/2"

Cable specification

Cable gland	Permitted cable diameter
M16x1.5 mm	4 to 8 mm (0.16 to 0.32")
M12x1.5 mm (for order version M12 socket for Memosens sensors)	2 to 5 mm (0.08 to 0.20")
M20x1.5 mm	6 to 12 mm (0.24 to 0.48")
NPT$^{3}/_{8}$"	4 to 8 mm (0.16 to 0.32")
G$^{3}/_{8}$	4 to 8 mm (0.16 to 0.32")
NPT½"	6 to 12 mm (0.24 to 0.48")
G½	7 to 12 mm (0.28 to 0.48")

Cable glands mounted at the factory are tightened with 2 Nm.

Connecting optional modules

With extension modules you can purchase additional functions for your device.

NOTICE

Unacceptable hardware combinations (due to conflicts in power supply)

Incorrect measurements or total failure of the measuring point as a result of heat build-up or overloading

- ▶ Find out if the planned upgrade of your device results in a permitted hardware combination (configurator on www.endress.com/CA80CR).
- ▶ A maximum of eight current inputs and current outputs is permitted.
- ▶ A maximum of two "DIO" modules is permitted.
- ▶ Please contact your Endress+Hauser sales center should you have any questions.

Cable entries and possible cable diameters

2) The power value indicated on the nameplate refers to the power consumption when commissioning at 5 °C (41 °F) after an operating time of one minute.

3) In the case of the "Outdoor" version, 2 bores are occupied; for this reason only 2 Memosens sensors are possible

Overview of all the optional modules

Module name				
AOR	**2R**	**4R**	**2DS**	**DIO**
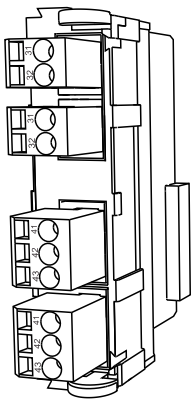	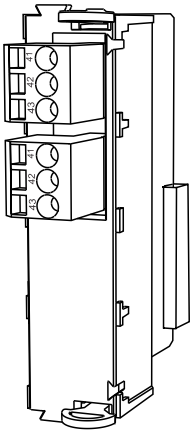	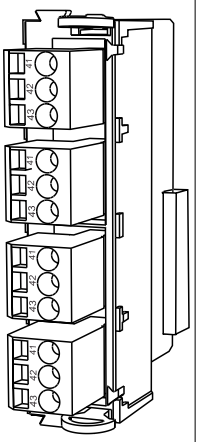	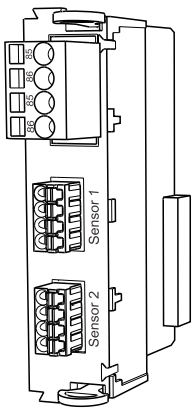	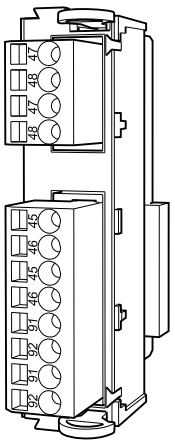
▪ 2 x 0/4 to 20 mA analog outputs ▪ 2 relays ▪ Order No. 71111053	▪ 2 relays ▪ Order No. 71125375	▪ 4 relays ▪ Order No. 71125376	▪ 2 digital sensor inputs ▪ 2 power supply systems for digital sensors ▪ Order No. 71135631	▪ 2 digital inputs ▪ 2 digital outputs with auxiliary voltage ▪ Order No. 71135638
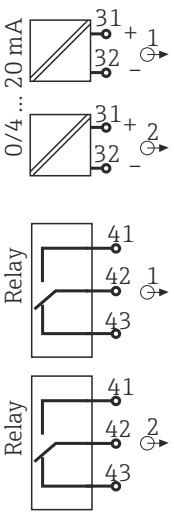	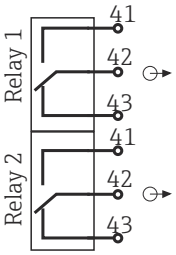	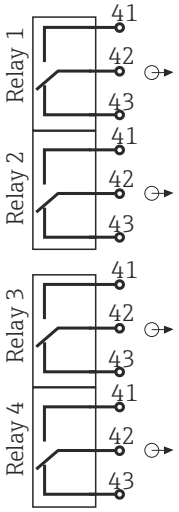	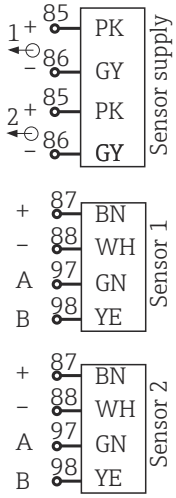	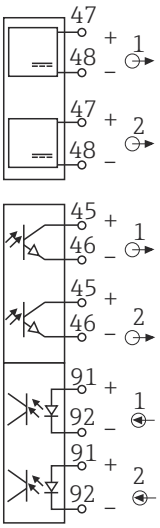

Module name				
2AO	**4AO**	**2AI**	**485**	
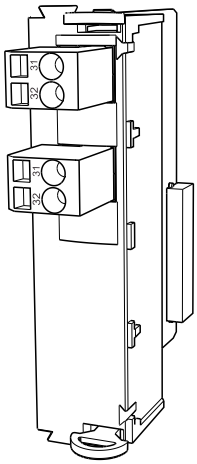	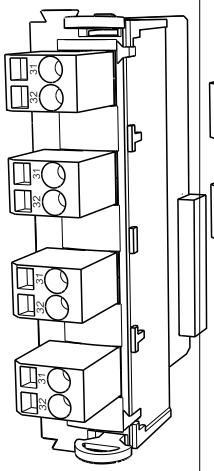	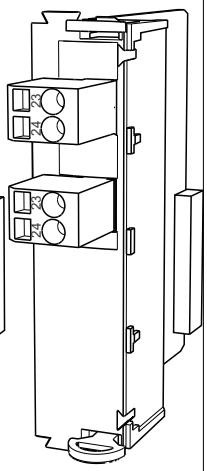	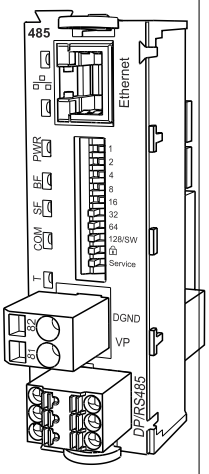	
▪ 2 x 0/4 to 20 mA analog outputs ▪ Order No. 71135632	▪ 4 x 0/4 to 20 mA analog outputs ▪ Order No. 71135633	▪ 2 x 0/4 to 20mA analog inputs ▪ Order No. 71135639	▪ Ethernet (web server or Modbus TCP) ▪ Order No. 71135634	
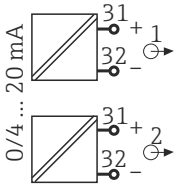	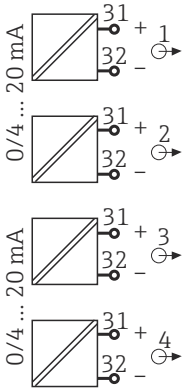	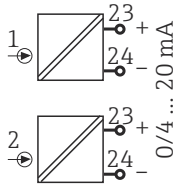	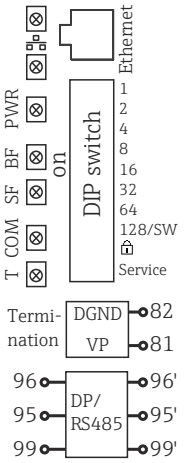	

PROFIBUS DP (module 485)
Contacts 95, 96 and 99 are jumpered in the connector. This ensures that PROFIBUS communication is not interrupted if the connector is disconnected.

Sensor connection (optional)

Sensors with Memosens protocol

Sensor types	Sensor cable	Sensors
Digital sensors **without** additional internal power supply	With plug-in connection and inductive signal transmission	▪ pH sensors ▪ ORP sensors ▪ Combined sensors ▪ Oxygen sensors (amperometric and optical) ▪ Conductivity sensors with conductive measurement of conductivity ▪ Chlorine sensors (disinfection)
	Fixed cable	Conductivity sensors with inductive measurement of conductivity
Digital sensors with additional internal power supply	Fixed cable	▪ Turbidity sensors ▪ Sensors for interface measurement ▪ Sensors for measuring the spectral absorption coefficient (SAC) ▪ Nitrate sensors ▪ Optical oxygen sensors ▪ Ion-sensitive sensors

Performance characteristics

Maximum measured error [4)]

2 % of end of measuring range

With dilution and dilution factor 5:
Yellow method: additionally 3.0 % of end of measuring range

Maximum measured error for sensor inputs

→ Documentation of the connected sensor

Maximum measured error for current inputs and outputs

Typical measured errors:

< 20 µA (with current values < 4 mA)

< 50 µA (with current values 4 to 20 mA)

at 25 °C (77° F) in each case

Additional measured error depending on the temperature:
< 1.5 µA/K

Repeatability [4)]

- to 0.5 mg/l (ppm) Cr(VI): ± 10 µg/l (ppb) Cr(VI)
- ≥ 0.5 mg/l (ppm) Cr(VI): ± 2 % of the display value

With dilution and dilution factor 5:
Additionally 1.5 % of end of measuring range

Repeatability of sensor inputs

→ Documentation of the connected sensor

Measuring interval

Continuous (approx. 5 min), adjustable 10 min to 24 h

Sample requirement

Without dilution module
22 ml (0.74 fl oz)/measurement

With dilution module
- Sample: 11 to 15 ml (0.37 to 0.51 fl oz)/measurement (depends on dilution factor)
- Dilution water: 17 to 21 ml (0.57 to 0.71)/measurement (depends on dilution factor)

4) According to ISO 15839 with standard solutions. Measured errors include all the uncertainties of the analyzer. They do not include the uncertainties from the standard solutions used as a reference.

Reagent requirement
- Approx. 65 µl per reagent and measurement
- Given a measuring interval of 10 min, one set of reagents lasts for approx. 3.5 months

Standard requirement
Given a calibration interval of 48 h approx. 420 ml (14.2 fl.oz) per month

Calibration interval
1 h to 90 days, depending on the application and ambient conditions

Maintenance interval
Every 3 to 6 months, depending on the application

Maintenance effort
- Weekly: visual inspection
- Quarterly: 1 hour

Installation

Mounting location

Note the following when erecting the device:

- ▶ If mounting on a wall, make sure that the wall has sufficient load-bearing capacity and is fully perpendicular.
- ▶ If mounting on a base, erect the device on a level surface.
- ▶ Protect the device against additional heating (e.g. from a heating system).
- ▶ Protect the device against mechanical vibrations.
- ▶ Protect the device against corrosive gases, e.g. hydrogen sulfide (H_2S) .
- ▶ Make sure to pay attention to the maximum height difference and the maximum distance from the sampling point.
- ▶ Ensure that the unit can drain freely, without any siphoning effects.
- ▶ Make sure air can circulate freely at the front of the housing.
- ▶ Open analyzers (i.e. analyzers that are supplied without a door) may only be erected in closed areas or in a protective cabinet or similar facility.

Installation instructions

The device can be installed in the following ways:
- Mounted on a wall
- Mounted on a base
- Post mounting / on a post (accessory)

Spacing required for installing analyzer

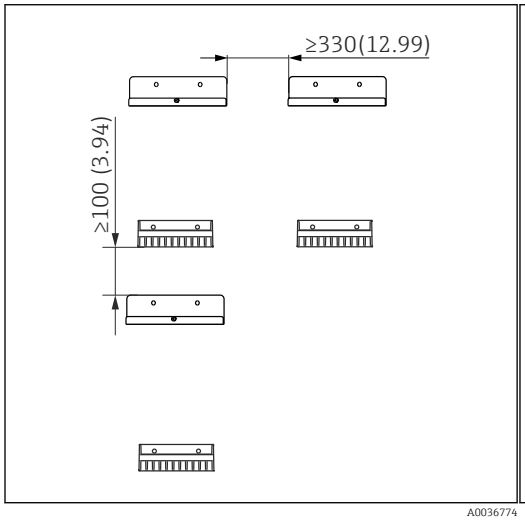

17 Minimum spacing required for mounting. Engineering unit mm (in).

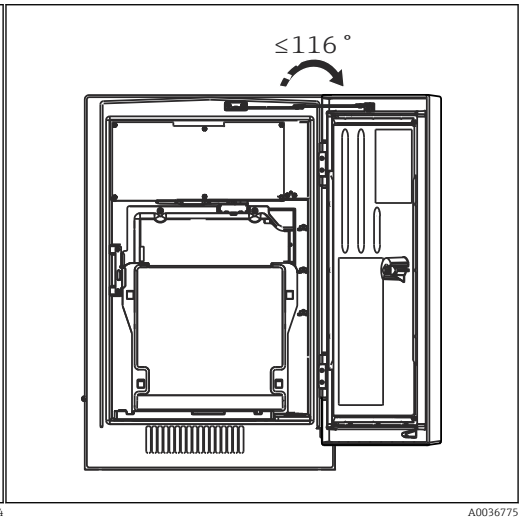

18 Maximum opening angle

Spacing required for installing wall-mount version

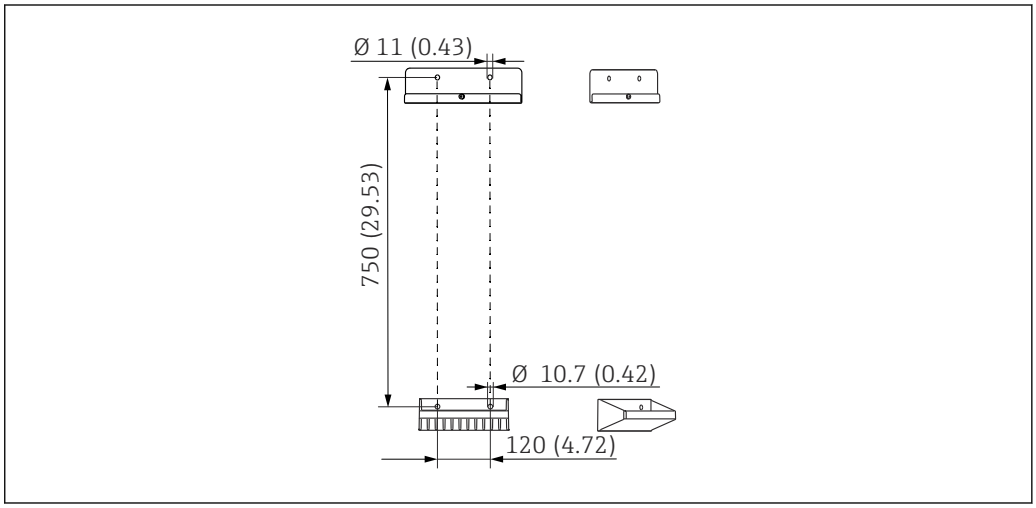

19 Holder unit dimensions. Engineering unit mm (in)

Environment

Ambient temperature range	**All housing versions with the exception of the outdoor version** +5 to +40 °C (41 to 104 °F) **Outdoor version** -20 to +40 °C (-4 to 104 °F)
Storage temperature	–20 to 60 °C (–4 to 140 °F)
Humidity	10 to 95 %, non-condensing
Degree of protection	IP55 (cabinet, analyzer stand), TYPE 3R (cabinet, analyzer stand)
Electromagnetic compatibility [5)]	Interference emission and interference immunity as per EN 61326-1:2013, Class A for Industry
Electrical safety	According to EN/IEC 61010-1:2010, Class I equipment Low voltage: overvoltage category II For installations up to 2000 m (6500 ft) above MSL
Pollution degree	Pollution level 2

Process

Sample temperature	4 to 40 °C (39 to 104 °F)
Consistency of the sample	Low solids content (turbidity < 50 NTU), aqueous, homogenized
Sample supply	Unpressurized

5) Sufficient mains quality is required to operate the product as designated.

Mechanical construction

Dimensions

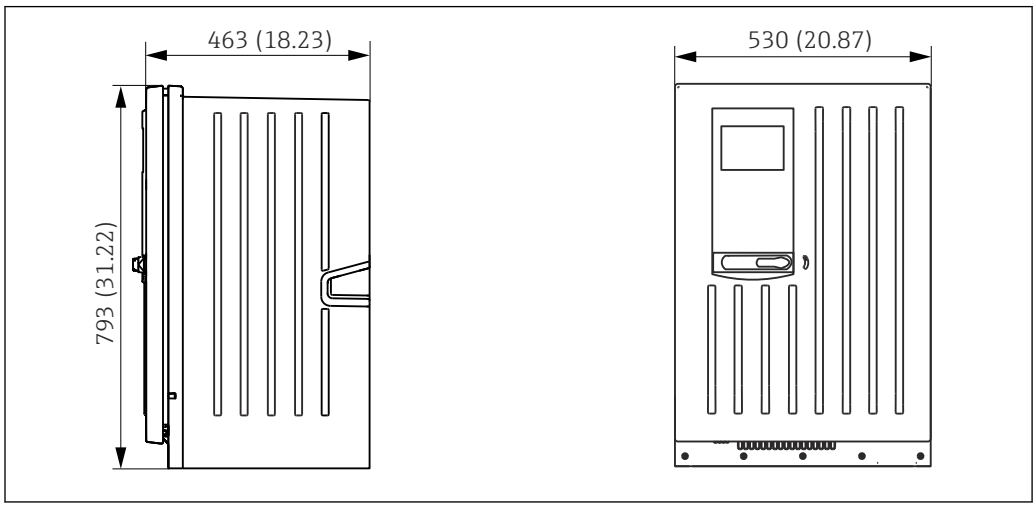

20 Liquiline System CA80 closed version, dimensions in mm (in)

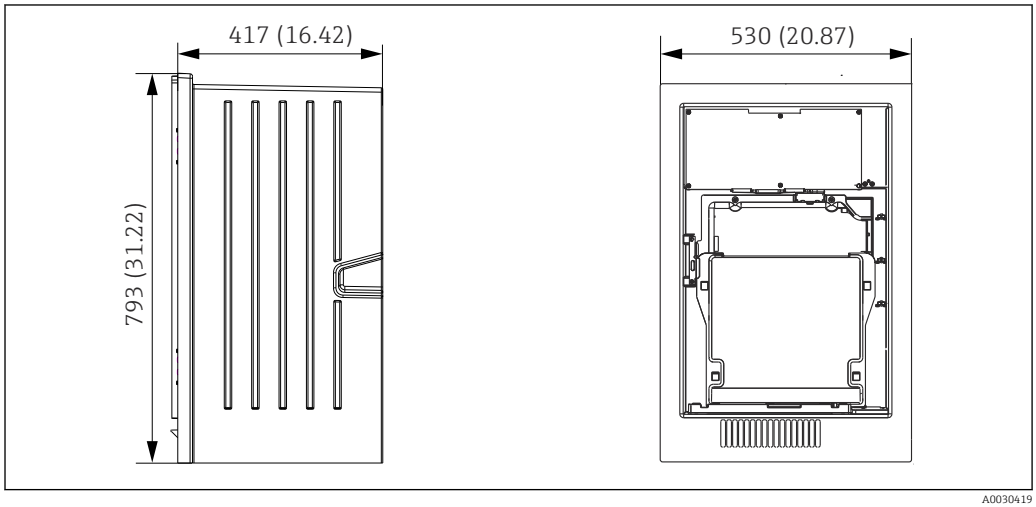

21 Liquiline System CA80 open version, dimensions in mm (in)

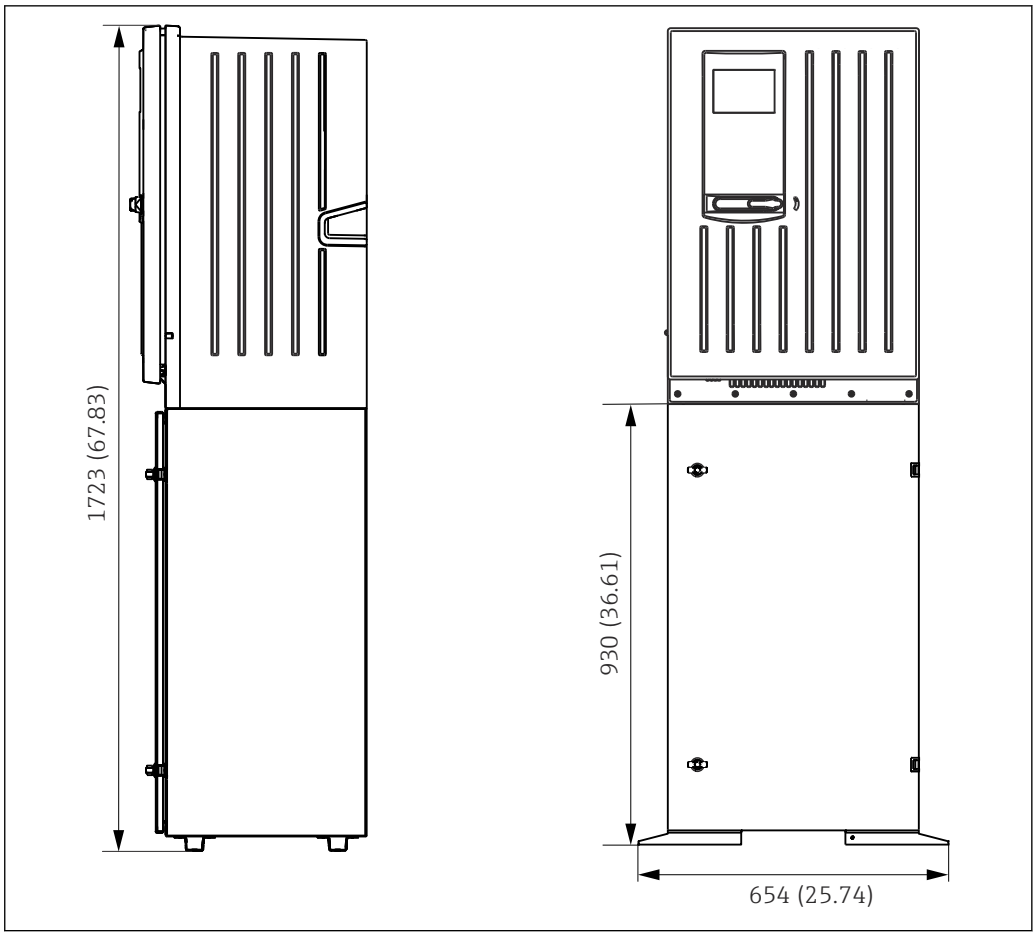

22 *Liquiline System CA80 with base, dimensions in mm (in)*

Weight

Order version	Weight
Cabinet version	39.5 kg (87.1 lbs)
Open installation	31.5 kg (69.45 lbs)
Analyzer stand	72.5 kg (159.8 lbs)

Materials

Parts not in contact with medium	
Cabinet version, exterior cover	Plastic ASA+PC
Open installation, exterior cover	
Cabinet version, interior lining	Plastic PP
Open installation, interior lining	
Window	Shatterproof glass, coated
Reagent container	Plastic PP
Insulation	Plastic EPP (extruded PP)
Base, analyzer stand	Powder-coated sheet steel

Parts in contact with medium	
Dispensers	Plastic PP and elastomer TPE
Liquid Manager	Plastic PP and elastomer FKM
Hoses	C-Flex, NORPRENE
Optical window	Glass

Molded seal	Elastomer EPDM
Drain pipe	Plastic PP
Sample collecting vessel (optional) ▪ Beaker ▪ Cover ▪ Level detector pins ▪ Seal	 ▪ Plastic PMMA ▪ Plastic PP ▪ Stainless steel 1.4404 (V4A) ▪ EPDM
Valve (optional)	PVDF

Process connection

Sample inlet:

With sample collecting vessel	Plug-in connector for rigid hoses with OD 4 mm
Without sample collecting vessel	Hose barb for flexible hoses with ID 1.6 mm
Dilution water:	Hose barb for flexible hoses with ID 3.2 mm
Outlet:	Hose barb for flexible hoses with ID 13 mm

Hose entries

4 x bores for M32 for sample inflow and outflow

Hose specification (self-priming analyzer)

- Clearance: max. 1.0 m (3.3 ft)
- Height: max. 0.5 m (1.6 ft)
- Hose ID: 1.6 mm ($^{1}/_{16}$ in)

Operability

Operating concept

The simple and structured operating concept sets new standards:
- Intuitive operation with the navigator and soft keys
- Fast configuration of application-specific measurement options
- Easy configuration and diagnosis thanks to plain-text display
- All languages that can be ordered are available in every device

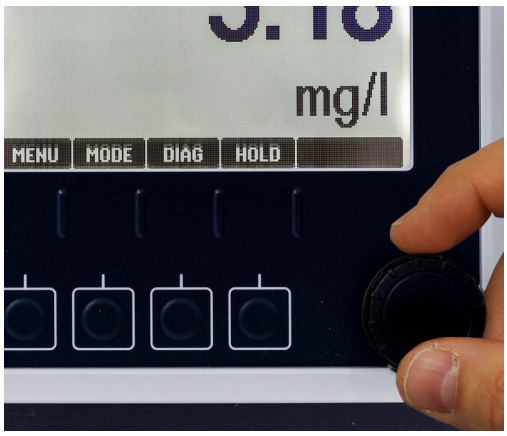

23 *Easy operation*

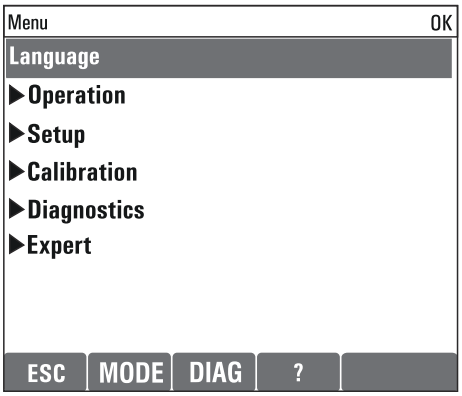

24 *Plain-text menu*

Display

Graphic display:
- Resolution: 240 x 160 pixel
- Back light with switch-off function
- Red display background for alarms alerts users to errors
- Transflective display technology for maximum contrast even in bright environments
- User-definable measuring menus mean you can always keep track of the values that are important for your application.

Remote operation

Via PROFIBUS DP

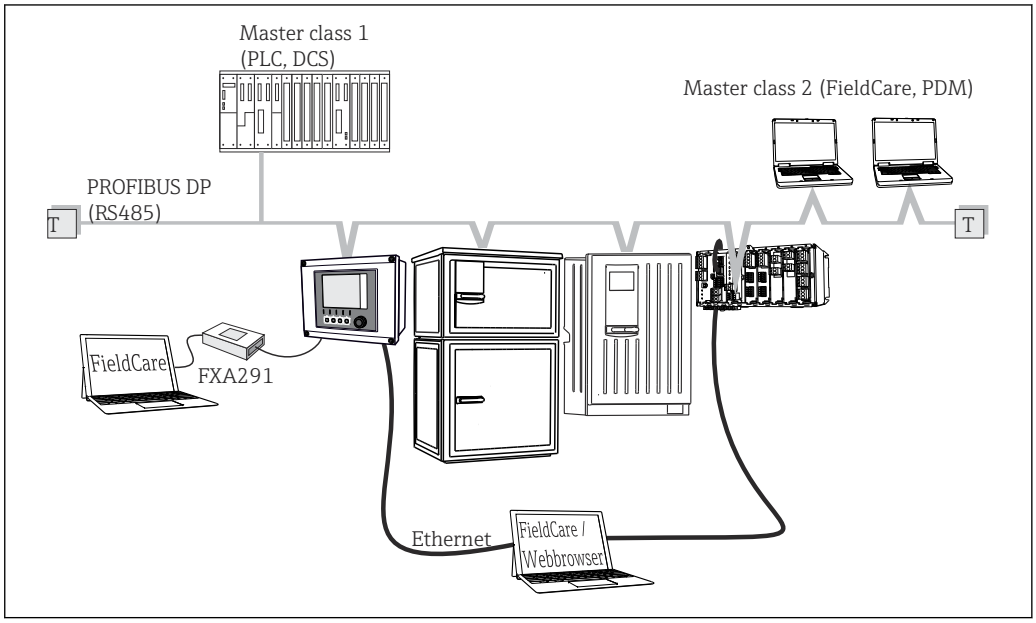

25 PROFIBUS DP

T Terminating resistor

Via Modbus RS485

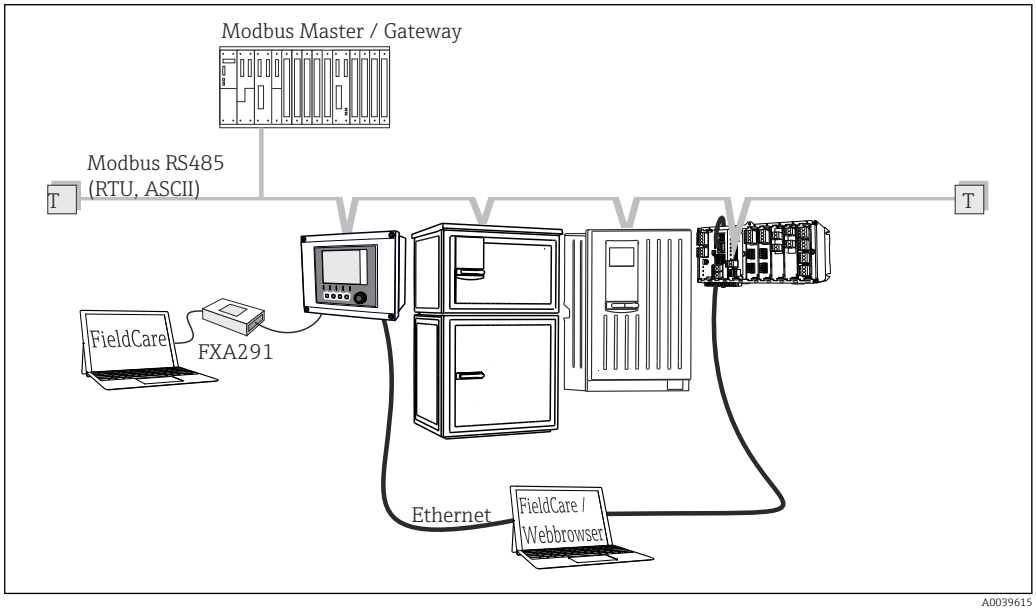

26 Modbus RS485

T Terminating resistor

Via Ethernet: web server/Modbus TCP/PROFINET/EtherNet/IP

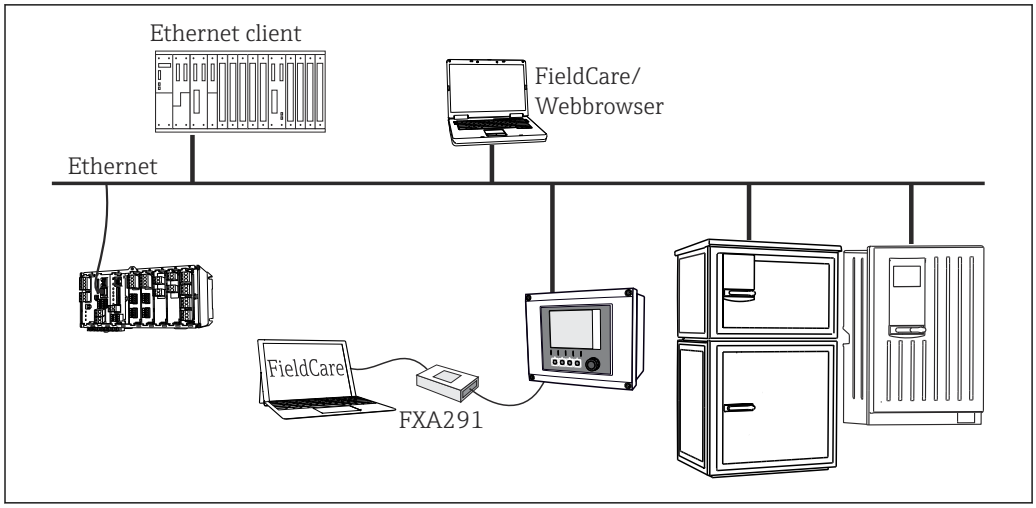

27 Modbus TCP or EtherNet/IP or PROFINET

Language packages

The language selected in the product structure is the operating language preset at the factory. All other languages can be selected using the menu.

- English (US)
- German
- Chinese (Simplified, PR China)
- Czech
- Dutch
- French
- Italian
- Japanese
- Polish
- Portuguese
- Russian
- Spanish
- Turkish
- Hungarian
- Croatian
- Vietnamese

The availability of other languages can be checked via the product structure at www.endress.com/ca80cr.

Certificates and approvals

CE mark

The product meets the requirements of the harmonized European standards. As such, it complies with the legal specifications of the EU directives. The manufacturer confirms successful testing of the product by affixing to it the CE mark.

Other standards and guidelines

cCSAus

The product meets the requirements as per "CLASS 2252 06 - Process Control Equipment" and "CLASS 2252 86 - Process Control Equipment". It is tested to Canada and USA standards: CAN/CSA-C22.2 No. 61010-1-12 UL Std. No. 61010-1 (3rd Edition).

EAC

The product has been certified according to guidelines TP TC 004/2011 and TP TC 020/2011 which apply in the European Economic Area (EEA). The EAC conformity mark is affixed to the product.

Ordering information

Product page

www.endress.com/ca80cr

Product Configurator

On the product page there is a **Configure** button to the right of the product image.

1. Click this button.
   ↳ The Configurator opens in a separate window.
2. Select all the options to configure the device in line with your requirements.
   ↳ In this way, you receive a valid and complete order code for the device.
3. Export the order code as a PDF or Excel file. To do so, click the appropriate button on the right above the selection window.

For many products you also have the option of downloading CAD or 2D drawings of the selected product version. Click the **CAD** tab for this and select the desired file type using picklists.

Accessories

The following are the most important accessories available at the time this documentation was issued.

► For accessories not listed here, please contact your Service or Sales Center.

Device-specific accessories

Sample preparation

Liquiline System CAT810
- Pressure pipe sampling and microfiltration
- Order according to product structure
  (--> Online Configurator, www.endress.com/cat810)
- Technical Information TI01138C/07/EN

Liquiline System CAT820
- Sampling and membrane filtration
- Order according to product structure
  (--> Online Configurator, www.endress.com/cat820)
- Technical Information TI01131C/07/EN

Liquiline System CAT860
- Pressure pipe sampling and membrane filtration
- Order according to product structure
  (--> Online Configurator, www.endress.com/cat860)
- Technical Information TI01137C/07/EN

The Liquiline System CAT860 can only be operated with a Liquiline System CA80 single-channel device.

Installation accessories

Kit, post with bracket CA80, outd.
- Post 60 x 60 x 1800 mm, stainless steel 1.4571
- Post mount clamp CA80xx
- Kit installation instructions
- Order No. 71458285

Consumables

You can find the order codes on the website: https://www.endress.com/device-viewer.

1. Indicate the serial number of the device.
2. Search.
   ↳ Device information is displayed.
3. Select the "Spare parts" tab.

4. Click the product root.
   ↳ The complete product structure is displayed.

The following consumables are available:
- Reagent and standard solutions CY80CR
- Cleaner CY800 (for hoses in the device)
- Cleaner CY820 (for hoses of sample preparation system and of sample collecting vessel)
- CAC880, inlet and outlet hoses for CA80

Maintenance kit CAV800

Order according to product structure (https://www.endress.com/device-viewer)

Standard
- Dispensers, 4 x 2.5 ml and 4 x 10 ml, including mounted adapter
- Hoses
- Silicone grease, medium-viscosity, tube 2 g
- Plug
- Sealing caps
- Filter mats

Optional
- Inlet and outlet hoses
- Liquid Manager without motor
- Collecting vessel, beaker (2 pcs.)

Upgrade kits CAZ800

Kit for upgrade to two-channel device
- Valve for switching sample flow
- Two sample collecting vessels with level monitoring, pre-fitted on mounting bracket
- Hoses, connection adapters
- Activation code

Kit for dilution function
Order No. CAZ800-AAN5

Kit for upgrading the dilution function
- Hose with identification marking
- Modified cable gland
- Activation code

Sensors

pH glass electrodes

Memosens CPS11E
- pH sensor for standard applications in process and environmental engineering
- Digital with Memosens 2.0 technology
- Product Configurator on the product page: www.endress.com/cps11e

Technical Information TI01493C

Memosens CPS41E
- pH sensor for process technology
- With ceramic junction and KCl liquid electrolyte
- Digital with Memosens 2.0 technology
- Product Configurator on the product page: www.endress.com/cps41e

Technical Information TI01495C

Memosens CPS71E
- pH sensor for chemical process applications
- With ion trap for poison-resistant reference
- Digital with Memosens 2.0 technology
- Product Configurator on the product page: www.endress.com/cps71e

Technical Information TI01496C

Memosens CPS91E
- pH sensor for heavily polluted media
- With open aperture
- Digital with Memosens 2.0 technology
- Product Configurator on the product page: www.endress.com/cps91e

Technical Information TI01497C

Memosens CPS31E
- pH sensor for standard applications in drinking water and swimming pool water
- Digital with Memosens 2.0 technology
- Product Configurator on the product page: www.endress.com/cps31e

Technical Information TI01574C

Memosens CPS71E
- pH sensor for chemical process applications
- Digital with Memosens 2.0 technology
- Product Configurator on the product page: www.endress.com/cps71e

Technical Information TI01496C

Memosens CPS91E
- pH sensor for heavily polluted media
- Digital with Memosens 2.0 technology
- Product Configurator on the product page: www.endress.com/cps91e

Technical Information TI01497C

Ceramax CPS341D
- pH electrode with pH-sensitive enamel
- Meets highest demands of measuring accuracy, pressure, temperature, sterility and durability
- Product Configurator on the product page: www.endress.com/cps341d

Technical Information TI00468C

Orbipac CPF81D
- Compact pH sensor for installation or immersion operation
- In industrial water and wastewater
- Product Configurator on the product page: www.endress.com/cpf81d

Technical Information TI00191C

ORP electrodes

Memosens CPS12E
- ORP sensor for standard applications in process and environmental engineering
- Digital with Memosens 2.0 technology
- Product Configurator on the product page: www.endress.com/cps12e

Technical Information TI01494C

Memosens CPS42E
- ORP sensor for process technology
- Digital with Memosens 2.0 technology
- Product Configurator on the product page: www.endress.com/cps42e

Technical Information TI01575C

Memosens CPS72E
- ORP sensor for chemical process applications
- Digital with Memosens 2.0 technology
- Product Configurator on the product page: www.endress.com/cps72e

Technical Information TI01576C

Memosens CPS92E
- ORP sensor for use in heavily polluted media
- Digital with Memosens 2.0 technology
- Product Configurator on the product page: www.endress.com/cps92e

Technical Information TI01577C

Orbipac CPF82D
- Compact ORP sensor for installation or immersion operation in process water and wastewater
- Product Configurator on the product page: www.endress.com/cpf82d

Technical Information TI00191C

Conductivity sensors with inductive measurement of conductivity

Indumax CLS50D
- High-durability inductive conductivity sensor
- For standard and hazardous area applications
- With Memosens technology
- Product Configurator on the product page: www.endress.com/cls50d

Technical Information TI00182C

Conductivity sensors with conductive measurement of conductivity

Memosens CLS21E
- Digital conductivity sensor for media with medium or high conductivity
- Conductive measurement
- With Memosens 2.0
- Product Configurator on the product page: www.endress.com/cls21e

Technical Information TI01528C

Oxygen sensors

Oxymax COS51D
- Amperometric sensor for dissolved oxygen
- With Memosens technology
- Product Configurator on the product page: www.endress.com/cos51d

Technical Information TI00413C

Oxymax COS61D
- Optical oxygen sensor for drinking water and industrial water measurement
- Measuring principle: quenching
- With Memosens technology
- Product Configurator on the product page: www.endress.com/cos61d

Technical Information TI00387C

Memosens COS81D
- Sterilizable, optical sensor for dissolved oxygen
- With Memosens technology
- Product Configurator on the product page: www.endress.com/cos81d

Technical Information TI01201C

Chlorine dioxide and chlorine sensors

Memosens CCS50D
- Membrane-covered amperometric sensor for chlorine dioxide
- With Memosens technology
- Product Configurator on the product page: www.endress.com/ccs50d

Technical Information TI01353C

Memosens CCS51D
- Sensor for measuring free chlorine
- Product configurator on the product page: www.endress.com/ccs51d

Technical Information TI01423C

Ion-selective sensors

ISEmax CAS40D
- Ion selective sensors
- Product Configurator on the product page: www.endress.com/cas40d

Technical Information TI00491C

Turbidity sensors

Turbimax CUS51D
- For nephelometric measurements of turbidity and solids in wastewater
- 4-beam scattered light method
- With Memosens technology
- Product Configurator on the product page: www.endress.com/cus51d

Technical Information TI00461C

Turbimax CUS52D
- Hygienic Memosens sensor for turbidity measurement in drinking water, process water and in utilities
- With Memosens technology
- Product Configurator on the product page: www.endress.com/cus52d

Technical Information TI01136C

SAC and nitrate sensors

Viomax CAS51D
- SAC and nitrate measurement in drinking water and wastewater
- With Memosens technology
- Product Configurator on the product page: www.endress.com/cas51d

Technical Information TI00459C

Interface measurement

Turbimax CUS71D
- Immersion sensor for interface measurement
- Ultrasonic interface sensor
- Product Configurator on the product page: www.endress.com/cus71d

Technical Information TI00490C

Cable junction with Velcro strip
- 4 pieces, for sensor cable
- Order No. 71092051

Communication-specific accessories

Additional functionality

▶ Always quote the serial number of your device when ordering activation codes.

	Communication; software
51516983	Commubox FXA291 (hardware)
71127100	SD card with Liquiline Firmware, 1 GB, Industrial Flash Drive
71135636	Activation code for Modbus RS485
71219871	Activation code for EtherNet/IP
71135635	Activation code for Profibus DP for module 485

	Communication; software
71449914	Upgrade code for EtherNet/IP+web server for BASE2
71449915	Upgrade code for Modbus TCP+web server for BASE2
71449918	Upgrade code for web server for BASE2
71449901	Upgrade code for PROFINET+web server for BASE2
71249548	Kit CA80: activation code for 1st digital sensor input
71249555	Kit CA80: activation code for 2nd digital sensor input

	Retrofit kits
71136999	Kit CSF48/CA80: retrofit service interface (CDI flange connector, counter nut)
71111053	Kit module AOR: 2 x relay, 2 x analog output 0/4 to 20 mA
71125375	Kit module 2R: 2 x relay
71125376	Kit module 4R: 4 x relay
71135632	Kit module 2AO: 2 x analog output 0/4 to 20 mA
71135633	Kit module 4AO: 4 x analog output 0/4 to 20 mA
71135631	Kit module 2DS: 2 x digital sensor, Memosens
71135634	Kit module 485: PROFIBUS DP or Modbus RS485. This requires an additional activation code which can be ordered separately.
71135638	Kit module DIO: 2 x digital input; 2 x digital output; auxiliary power supply for digital output
71135639	Kit module 2AI: 2 x analog input 0/4 to 20 mA
71140888	Upgrade kit module 485 + Profibus DP
71140889	Upgrade kit module 485 + Modbus RS485
71141366	Kit, extension backplane module

Software

Memobase Plus CYZ71D
- PC software to support laboratory calibration
- Visualization and documentation of sensor management
- Sensor calibrations stored in database
- Product Configurator on the product page: www.endress.com/cyz71d

Technical Information TI00502C

Field Data Manager Software MS20/21
- PC software for central data management
- Visualization of series of measurements and logbook events
- SQL database for secure data storage

System components

Measuring cables

Memosens data cable CYK10
- For digital sensors with Memosens technology
- Product Configurator on the product page: www.endress.com/cyk10

Technical Information TI00118C

Memosens data cable CYK11
- Extension cable for digital sensors with Memosens protocol
- Product Configurator on the product page: www.endress.com/cyk11

Technical Information TI00118C

Measuring cable CYK81
- Unterminated cable for extending sensor cables (e.g. Memosens, CUS31/CUS41)
- 2 x 2 cores, twisted with shielding and PVC sheath (2 x 2 x 0.5 mm^2 + shielding)
- Sold by meter, Order No.: 51502543

SD card

- Industrial Flash Drive, 1 GB
- Order number: 71110815

www.addresses.endress.com

Endress+Hauser

People for Process Automation